City of Pittsburg
Planning Commission and
Historic Resources Commission Agenda

July 23, 2019

City Hall Council Chamber
65 Civic Avenue, Pittsburg, CA 94565

Regular Meeting
7:00 P.M.

Planning Commission Members
Elissa Robinson, Chair
Sarah Foster, Vice-Chair
J. Faye Fields, Commissioner
Christopher Moreno, Commissioner
Dr. Trinh Nguyen, Commissioner
Michael Caliguire, Commissioner
James Coniglio, Commissioner

Any member of the public who wishes to address the Commission should complete a Speaker's Card, available on the public counter below the dais. Please note on the card the agenda item number, or, for items not listed on this agenda, a brief description of the issue on which you would like to address the Commission. Give the completed form to the Minutes Clerk or a staff member, who will give the card to the Commission Chair. The Chair will invite the speaker(s) to the podium at the appropriate time during the meeting. Each individual will be given three minutes to address the Commission, unless additional time is allowed as provided for spokespersons. Prior to speaking, each speaker is requested to state his or her name and business and city of residence in a clear and audible tone of voice. For items listed under the "Public Hearings" or "Commission Consideration" portions of this agenda, the public hearing or public comment period will follow a brief presentation on the item by Planning Department staff and/or the project applicant.

A decision by the Planning Commission is not final until the appeal period expires 10 calendar days after the date the decision occurred. The applicant, City Council member(s), City Manager, or any affected person may appeal the denial, approval, recommendation, or any condition of approval of an item within the 10-day appeal period. A completed appeal form and the applicable filing fee must be filed with the City Planner, 65 Civic Avenue, Pittsburg. The appeal form must include the name and address of the appellant and state the reasons for the appeal. The appeal will be set for City Council consideration and appropriate public notification given.

The Commission requests that you refrain from disruptive conduct during the meeting and that you observe the order and decorum of the Council Chamber. Please turn off or set to vibrate all cellular phones, and refrain from making personal, impertinent or slanderous remarks. Boisterous or disruptive behavior while the Commission is in session, and the display of signs in a manner that violates the rights of others or prevents others from watching or fully participating in the Planning Commission meeting is considered counterproductive and will not be tolerated, and the Commission Chair can order any person who engages in such conduct to leave the Council Chamber.

This agenda was posted in City Hall on Thursday, July 18, 2019

PLANNING COMMISSION MEETING

CALL TO ORDER

ROLL CALL

PLEDGE OF ALLEGIANCE

DELETIONS, WITHDRAWALS OR CONTINUANCES

COMMENTS FROM THE AUDIENCE

CONSENT

1. **Minutes**
   Meeting Minutes of June 25, 2019

PUBLIC HEARINGS

2. **Best Care Fumigation, AP-19-1415 (DR)**
   This is a request for design review approval of plans to place a 600 square foot mobile office trailer and 224 square foot trash enclosure on an 8,555 square foot site located at 5 Industry Road, in the CW (Waterfront Commercial) District. Assessor's Parcel No. 073-042-012.

ZONING ADMINISTRATOR REPORTS

3. **Submittal of Adopted Zoning Administrator Resolutions**
   The Zoning Administrator submits five resolutions previously approved under delegated authority, in accordance with Pittsburg Municipal Code sections 18.50.410 (home occupations) and 18.32.010 (fence height exceptions).

STAFF COMMUNICATIONS

4. **Tentative Schedule**

COMMITTEE REPORTS

ADJOURNMENT OF PLANNING COMMISSION MEETING

HISTORIC RESOURCES COMMISSION MEETING

CALL TO ORDER

ROLL CALL

DELETIONS, WITHDRAWALS OR CONTINUANCES

COMMENTS FROM THE AUDIENCE

CONSENT

5. Minutes
Meeting Minutes of March 26, 2019

STAFF COMMUNICATIONS

6. Information Item Regarding 352, 368, and 384 Railroad Avenue

ADJOURNMENT OF HISTORIC RESOURCES COMMISSION

NOTICE TO PUBLIC

NOTICE TO THE DISABLED AND VISUALLY OR HEARING IMPAIRED

In compliance with the Americans with Disabilities Act, the city of Pittsburg will provide special assistance for disabled citizens. Upon request, an agenda for any meeting shall be made available in appropriate alternative formats. The Council Chamber is equipped with sound amplifier units for use by the hearing impaired. The units operate in conjunction with the Chamber's sound system. You may request the sound amplifier from the City Clerk for personal use during Commission meetings. If you need special assistance to participate in this meeting, or are requesting a specially formatted agenda, please contact the City Clerk at 925-252-4850. Notification 48 hours prior to the meeting will enable the city to make reasonable arrangements to ensure accessibility to this meeting or provide the requested agenda format. (28 CFR 35.102-35.104 ADA Title II)

GENERAL INFORMATION

Copies of the open session agenda packets that are distributed to the Planning Commission are on file in the office of the Planning Department, 65 Civic Avenue, Pittsburg, California, and are available for public inspection, beginning no fewer than 72 hours in advance of the meeting, during normal business hours (8:00 a.m. – 5:00 p.m., Monday through Friday, except city holidays). Additionally, if any reports or documents that are public records are distributed to the Planning Commission fewer than 72 hours before the meeting, those reports and documents will also be available for public inspection in the city's Planning Department and at the Commission meeting. The Pittsburg Library is also provided a full agenda packet for your convenience. As a courtesy, the agenda is also located on the city's website at www.ci.pittsburg.ca.us.

MINUTES
OF A REGULAR MEETING
OF THE
PITTSBURG PLANNING COMMISSION

June 25, 2019

A regular meeting of the Pittsburg Planning Commission was called to order by Chair Robinson at 7:00 p.m. on Tuesday, June 25, 2019, in the Council Chamber at City Hall, 65 Civic Avenue, Pittsburg, California.

ROLL CALL

Present: Chair Robinson, Vice-Chair Foster, Commissioners Fields, Moreno, Nguyen, Caliguire

Absent: Commissioner Coniglio

Staff: Director of Community Development Jill Hecht, City Engineer Richard Abono, Planning Manager/ Secretary Kristin Pollot, Senior Planner Hector Rojas, Assistant Planner John Dacey, Deputy City Clerk Amanda McVey, Administrative Coordinator Shelby Rose

PLEDGE OF ALLEGIANCE

Commissioner Caliguire led the Pledge of Allegiance.

DELETIONS / WITHDRAWALS / CONTINUANCES

There were no deletions, withdrawals or continuances.

COMMENTS FROM THE AUDIENCE

There were no comments from the audience.

PRESENTATIONS

There were no presentations.

CONSENT

1. Minutes of June 11, 2019

On motion by Commissioner Moreno seconded by Commissioner Nguyen to approve and carried by the following vote:

AYES: Caliguire, Fields, Foster, Moreno, Nguyen, Robinson
NAYES: None
ABSTAIN: None
ABSENT: Coniglio

PUBLIC HEARINGS

2. Courtyard by Marriott Project, AP-19-1417 (DR, TRP)

This is a public hearing on a request for design review approval of plans to construct a four-story, 69,972-square-foot hotel with 125 guest rooms on the 2.75-acre eastern portion of a larger 5.23-acre site located at the southwest corner of Railroad Avenue and Center Drive. The property is located within the Railroad Avenue Specific Plan (RASP) land use designation of Public/Institutional. Assessor's Parcel Nos. 086-100-040 and 086-100-041. A tree removal permit is also requested in order to remove several mature trees having protected status under the City's Tree Preservation and Protection Ordinance (PMC Chapter 18.84, Article XIX).

Senior Planner Hector Rojas gave a presentation on the item.

David Chordbajian on behalf of StayCal Hotels spoke as the applicant.

Bruce Ohlson, Pittsburg, would like pedestrian pathway going north-south between the hotel and the office. Also, would like to see the free right turn onto freeway (west bound) removed.

Durie Foster, Pittsburg, expressed concern over freeway noise and would like to see that soundproof windows be installed in sleeping rooms. Would like clarification on the types of trees that would be removed. Recommended fencing around the entire site, suggested serious consideration of pedestrian over crossings, and raised question as to why there are no regional trail fees.

On motion by Commissioner Moreno with a modification to Condition of Approval #5 in order to add tree No. 8 to be included for potential preservation, seconded by Commissioner Foster to approve the application and carried by the following vote:

AYES:	Caliguire, Fields, Foster, Moreno, Nguyen, Robinson
NAYES:	None
ABSTAIN:	None
ABSENT:	Coniglio

3. Fernandes Towing, AP-18-1326 (UP, DR)

This is a public hearing on a request by Fernandes Towing for approval of a use permit to expand an existing vehicle towing and storage yard onto a new site, and design review approval of plans to construct a new 4,000 square-foot steel-sheeted storage building located at 554 W. 10th Street, within the CS-O (Service Commercial with an Overlay, Ordinance No. 06-1277) District. Assessor's Parcel Nos. 085-270-016, -045, and -046.

Associate Planner John Dacey gave a presentation on the item.

David Fogelman spoke as the applicant.

David Bustos, Pittsburg, expressed concern regarding the drainage and storm water runoff to neighboring property.

On motion by Commissioner Moreno with an added condition of approval to resolve

drainage issue prior to October 15, 2019, seconded by Commissioner Foster to approve the application and carried by the following vote:

AYES:	Caliguire, Fields, Foster, Moreno, Nguyen, Robinson
NAYES:	None
ABSTAIN:	None
ABSENT:	Coniglio

STAFF COMMUNICATIONS

4. Notice of Intent to Exercise Delegated Design Review Authority, Conduct a Zoning Administrator Public Hearing, and Submittal of Adopted Zoning Administrator resolutions.

The Zoning Administrator submits one notice of intent to exercise delegated design review authority for an exterior façade update at 635 Railroad Avenue, one notice of intent to conduct a Zoning Administrator public hearing on a proposed fence height exception for Taqueria Los Gallos at 266 Diane Ave., and one resolution previously approved under the delegated authority (Planning Commission Resolution No. 9918).

The Commissioners acknowledged receipt of the notices of intent.

COMMITTEE REPORTS

Commissioner Foster reported the TransPlan Subcommittee meet Tuesday, June 18, 2019, and reported they are actively working on adopting their budget.

Commissioner Moreno reported the Land Use Subcommittee meet Tuesday, June 18, 2019, to discuss 3 upcoming applications.

Commissioner Moreno reported the Land Use Subcommittee is scheduled to meet again on June 28, 2019.

ADJOURNMENT

The meeting was adjourned at 8:28 p.m. to July 23, 2019.

Respectfully Submitted,

_____

Kristin Pollot, AICP, Secretary

CITY OF PITTSBURG
PLANNING COMMISSION
STAFF REPORT
July 23, 2019

ITEM: **Best Care Fumigation, AP-19-1415 (DR)**

ORIGINATED BY: Shaum Mehra, 1143 Shrader Street, San Francisco, CA 94117.

SUBJECT: This is a request for design review approval of plans to place a 600 square foot mobile office trailer and 224 square foot trash enclosure on an 8,555 square foot site located at 5 Industry Road, in the CW (Waterfront Commercial) District. Assessor's Parcel No. 073-042-012.

RECOMMENDATION:

Staff recommends that the Commission adopt Resolution No. 10123, approving Design Review Application No. 19-1415, subject to conditions.

BACKGROUND:

On March 5, 2019, Shaum Mehra applied for a use permit for a truck terminal at the site. Upon further investigation of the description of the proposed use, it became evident that the proposed use best fit the use classification of "contractor", which is a permitted use at the site.

On April 23, 2019, Jose Delgado, of Best Care Fumigation, on behalf of the applicant, made changes to the application from use permit to design review for the placement of a 600 square foot office trailer and 224 square foot trash enclosure.

PROJECT DESCRIPTION:

Existing Conditions: The project site is located north of Industry Road, south of East 3rd Street, east of Harbor Street, and west Columbia Street. The parcel size is 8,555 square feet and is surrounded by a 6-foot-tall chain-link fence with slats.

See Attachment 3 for a map of surrounding land uses.

Proposed Project: Best Care Fumigation is a contractor use, which is a permitted use in the CW District. The business would operate between the hours of 6:00 a.m. and 6:00 p.m., Monday through Saturday. The business would staff between six and nine employees at the site. Employees would drive personal vehicles to the site, pick up company vehicles, and drive off-site to perform services. The site would consist of employee parking, parking for company vehicles (including two pickup trucks and up to four medium duty trucks with gross vehicle weight under 27,000 lb.), and fumigation tenting equipment. The fumigation tenting equipment includes tents, sandbags, clips, small hand tools and fans. The business would maintain all equipment either on company vehicles, or within the office trailer.

The proposed project is for design review of the 600 square foot office trailer to be placed on the site. The office trailer would contain three rooms, including one private office, a half-bathroom, closet, and office equipment such as a telephone, time clock, computer, filing cabinets, and uniforms. The structure would be a 50-feet long by 12-feet wide trailer with aluminum siding.

The proposed project would also include construction of a 16-foot by 14-foot trash enclosure of Concrete Masonry Units block with metal door and standing seam roof.

See Attachments 2 for project plans and an example of the proposed structure.

GENERAL PLAN/CODE COMPLIANCE:

General Plan: The project site is in the 'Downtown Subarea' of the General Plan and has a land use designation of 'Marine Commercial'. In this subarea, retail and commercial office uses line Railroad Avenue, north of East Tenth Street. Service commercial uses are located along East Tenth Street, previously known as the old County highway. Residential neighborhoods surround the commercial corridors, with newer higher density developments located near the waterfront. Within the 'Downtown Subarea' are five additional planning sub-areas, of which, this site falls into the 'Marine Commercial Center'.

The proposed project would be consistent with the General Plan, more specifically, Goal 2-G-3, which calls for concentrated commercial development; Goal 2-G-6, which calls for reuse and revitalization of underutilized sites; and Goal 11-G-10, which calls for buffer landscaping. The new use would utilize a vacant parcel and would provide improvements to the area.

As further shown in Attachment 4, the proposed project is consistent with all applicable General Plan goals and policies.

Zoning: The project site is located within the CW (Waterfront Commercial) District; where a contractor is a permitted use. Per PMC section 18.52.100, all projects require design review. The schedule set out in PMC Table 18.52.115 prescribes development regulations for the CW District. Attachment 5 shows the specifications on the proposed project.

Design Guidelines: The proposed project is subject to the City's adopted Development Review Design Guidelines (DRDG), adopted by Planning Commission through Resolution No. 9864. As shown in Attachment 6, the proposed project is consistent with the applicable DRDG sections, specifically those that call for: 1) parking areas be screened from view from any public right-of-way (DRDG IV.a); 2) existing trees on site be incorporated into the project design (DRDG IV.b); and 3) a free-standing structure within an existing industrial center be architecturally compatible with adjacent development (DRDG IV.i, IV.p).

The proposed project would also be in conformance with DRDG section IV, "Green Building Design Guidelines," if conditions are added to require that 1) fixed bicycle parking for at least one bicycle be provided on-site (DRDG VI.D.9); and 2) the applicant comply with all C.3 Stormwater regulations (DRDG VI.D.3).

Required Findings: Design review approval for the project can be granted by the Planning Commission only after the Commission makes a determination that the proposed project is consistent with PMC section 18.36.220 (B), which is summarized below:

A. the structures conform with good taste, good design and in general contribute to the character and image of the city as a place of beauty, spaciousness, balance, taste, fitness, broad vistas, and high quality;

B. the structures will be protected against exterior and interior noise, vibrations and other factors that may tend to make the environment less desirable;

C. the exterior design and appearance of the structures are not of inferior quality as to cause the nature of the neighborhood to materially depreciate in appearance and value;

D. the structures are in harmony with proposed developments on land in the general area; and

E. the applications conform with the criteria set forth in any applicable city-adopted design guidelines.

Environmental: The proposed project is categorically exempt from the requirements of the California Environmental Quality Act (CEQA) under Class 32, "In-Fill Development Projects," of the state CEQA Guidelines, section 15332.

Public Notice: Although not required by the PMC, on or prior to July 13, 2019, notice of the July 23, 2019, public meeting to consider design review of the proposed project was posted at City Hall, the Pittsburg Library; was delivered for posting at the Pittsburg Library; and was mailed via first class or electronic mail to the applicant, to the property owner, to owners of property located within 300 feet of the proposed project site, to local service agencies expected to provide services to the site, and to individuals who had previously filed written request for such notice. The notice was also posted on www.nextdoor.com (Nextdoor) and was sent directly to all subscribed residents in the "W 8th" Nextdoor neighborhood.

ANALYSIS:

As shown in Attachment 4, the proposed project is consistent with applicable goals and policies contained within the General Plan. Most notably, the proposed project is

consistent with Land Use Element Goals 2-G-1 and 2-G-6, which encourage the City to maintain a compact urban form within the City's projected municipal boundary and use vacant infill land and underutilized sites.

Staff believes that the Planning Commission can make the required findings to approve the design review request, with the inclusion of several conditions of approval, including key conditions as detailed below:

1. Site Maintenance. The entire parcel shall be kept clean and free of all litter, debris, and refuse. (Condition No. 5).
2. Bicycle Parking. The applicant shall provide fixed bicycle parking for at least one (1) bicycle on-site in a location providing convenient access and natural surveillance. The final location of bicycle parking stall shall be subject to review and approval by the Planning Division prior to installation. (Condition No. 8).
3. Landscape Maintenance. The applicant shall be responsible for maintaining landscaping in accordance with the approved landscape plan. Amendments or modifications to the approved landscape plan shall be submitted to the city planner for approval. (Condition No. 11).

Further, staff believes the proposed project features quality design for the proposed industrial area. The proposed project would utilize a long-standing vacant parcel which could otherwise contribute toward blighted conditions in the neighborhood.

ACTION REQUIRED:

Move to adopt Resolution No. 10123, approving Design Review Application No. 19-1415, subject to conditions.

ATTACHMENTS:

1. Proposed Resolution No. 10123
2. Project Plans, dated July 11, 2019
3. Map of Surrounding Land Uses
4. Applicable General Plan Goals and Policies
5. Property Development Regulations Table
6. Development Review Design Guidelines
7. Public Meeting Notice

Prepared by: Celina Palmer, Assistant Planner

Attachment 1

PROPOSED
BEFORE THE PLANNING COMMISSION OF THE CITY OF PITTSBURG

In the Matter of:

Resolution Granting Design Review Approval for the Placement of a 600 Square Foot Mobile Office Trailer at 5 Industry Road, for "Best Care Fumigation, AP-19-1415 (DR)."	)))))	Resolution No. 10123

The Planning Commission DOES RESOLVE as follows:

Section 1. Background

A. On March 5, 2019, Shaum Mehra, filed Planning Application No. 19-1415, requesting design review approval of plans to place a 600 square foot mobile office trailer and construct a 224 square foot trash enclosure on a 8,555 square foot site located at 5 Industry Road, in the CW (Waterfront Commercial) District. Assessor's Parcel No. 073-042-012.

B. The current proposed project is governed by the policies, development standards, and guidelines contained in the Pittsburg General Plan, Pittsburg Municipal Code (PMC) Title 18 (Zoning), and the City of Pittsburg Development Review Design Guidelines (DRDG; Planning Commission Resolution No. 9864).

C. Design review approval can be granted only after the Planning Commission makes a determination that the proposed project is consistent with PMC section 18.36.220.B, which is summarized below:

1. the structure conforms with good taste, good design and in general contributes to the character and image of the city as a place of beauty, spaciousness, balance, taste, fitness, broad vistas, and high quality;
2. the structure will be protected against exterior and interior noise, vibrations and other factors that may tend to make the environment less desirable;
3. the exterior design and appearance of the structure is not of inferior quality as to cause the nature of the neighborhood to materially depreciate in appearance and value;
4. the structure is in harmony with proposed developments on land in the general area; and
5. the application conforms with the criteria set forth in any applicable city-adopted design guidelines.

D. Although not required by the PMC, on or prior to July 13, 2019, notice of the July 23, 2019, public meeting to consider design review of the proposed project was posted at City Hall, the Pittsburg Library, near the proposed project site; was

delivered for posting at the Pittsburg Library; and was mailed via first class or electronic mail to the applicant, to the property owner, to owners of property located within 300 feet of the proposed project site, to local service agencies expected to provide services to the site, and to individuals who had previously filed written request for such notice. The notice was also posted on www.nextdoor.com (Nextdoor) and was sent directly to all subscribed residents in the "W 8th" Nextdoor neighborhood.

E. The project is categorically exempt from the requirements of the California Environmental Quality Act (CEQA) under Class 32, "In-Fill Development Projects" of the state CEQA Guidelines, section 15332.

F. On July 23, 2019, the Planning Commission held a public meeting on Design Review Application No. 19-1415, at which time oral and/or written testimony was considered.

Section 2. Findings

A. Based on the Planning Commission Staff Report, "Best Care Fumigation, AP-19-1415 (DR)," and based on all the information contained in the Planning Division files on the project, adopted and incorporated herein by reference and available for review in the Planning Division located at 65 Civic Avenue in Pittsburg, and based on all written and oral testimony presented at the meeting, the Planning Commission finds that:

1. All recitals above are true and correct and incorporated herein by reference.

2. The structures conform with good taste, good design and in general contribute to the character and image of the city as a place of beauty, spaciousness, balance, taste, fitness, broad vistas, and high quality, in that office trailer's utilitarian design is appropriate for the area's industrial character. The proposed project will also result in the development of a long-standing vacant parcel, which could otherwise contribute to blight within the neighborhood.

3. The structures will be protected against exterior and interior noise, vibrations and other factors which may tend to make the environment less desirable, in that the proposed structures will be required to comply with all applicable building and fire codes.

4. The exterior design and appearance of the site will not be of inferior quality as to cause the nature of the neighborhood to materially depreciate in appearance and value, in that the project includes the addition of several trees at the site and will appear more attractive than the vacant

parcel in its current state of underutilization.

5. The structures will be in harmony with proposed developments on land in the general area, in that there are no proposed developments near the office trailer's vicinity.

6. The proposed projects will conform with the criteria set forth in the City's adopted Development Review Design Guidelines (DRDG, Planning Commission Resolution No. 9864), if a condition is added requiring the applicant to provide fixed bicycle parking on-site for at least one bicycle (DRDG VI.D.9).

B. The Staff Report entitled, "Best Care Fumigation, AP-19-1415 (DR)," dated July 23, 2019, is referenced hereto as additional support for findings.

Section 3. Decision

A. Based on the findings set forth above, this Planning Commission hereby approves Design Review Application No. 19-1415, subject to the following conditions:

1. Conformity with Project Plans. The project shall be constructed in substantial conformity with the project plans and example elevations date stamped July 11, 2019, except as hereinafter may be modified. Any major changes to the project plans shall be subject to review and approval by the Planning Commission at the City Planner's discretion.

2. Exterior Color. The trailer's exterior, including any attached mechanical equipment shall be painted brown or similar earth tone.

3. Skirting: Skirting shall be installed along the trailer's base perimeter to screen any unsightly elements. Final color and design of skirting shall be subject to review and approval by the Planning Division prior to the issuance of any building or site improvement permits.

4. Exterior Appearance. The exterior of the structure shall be maintained in a good state of repair and the exterior finish must be clean and well maintained.

5. Site Maintenance. The entire parcel shall be kept clean and free of all litter, debris, and refuse.

6. On-site Occupancy Prohibited. No person shall live on-site.

7. Business License. The business operator to obtain and maintain a valid business license for the business at all times.

8. Bicycle Parking. The applicant shall provide fixed bicycle parking for at least one (1) bicycle in a location on-site, providing convenient access and natural surveillance. The final location of bicycle parking stall shall be subject to review and approval by the Planning Division prior to installation.

9. Fence Maintenance. The fence shall be maintained erect and in a good state of repair. A dilapidated, dangerous, or unsightly fence or wall shall be repaired, replaced, or removed, as the situation may warrant.

10. Fence Screening Slats. The applicant shall install privacy slats in the chain link fencing surrounding the property. Slats shall be replaced within 72 hours if damaged or vandalized.

11. Landscape Maintenance: The applicant shall be responsible for maintaining landscaping in accordance with the approved landscape plan. Amendments or modifications to the approved landscape plan shall be submitted to the city planner for approval.

12. Storage of Equipment. Outdoor storage of materials and equipment shall be prohibited. All fumigation equipment shall be stored on company vehicles or within the office trailer.

13. Parking. The applicant shall provide wheel stops at all 90-degree angle parking stalls. The wheel stops shall be shown on the building plans and shall be reviewed and approved by the Planning Division prior to issuance of a building permit.

14. Parking. All parking stalls shall be striped, marked, or otherwise delineated, using the same pattern shown on the approved site plan, and as modified by the conditions above. The striping shall remain clearly delineated at all times.

<u>Engineering Conditions:</u>

Engineering Fees:

15. Improvement and Grading Plan Review fees. The applicant shall provide an initial payment for review of the grading and improvement plans with the first submittal. These fees are based on the engineer's estimated costs for site improvements and grading, which shall be submitted with the plans. The improvement plan check fee is 6% of the cost of the improvements. The grading plan check fee is 2.5% of the cost for grading, or it may be based upon cubic yards of earth disturbance as set forth in the City's Master Fee Schedule. Fifty percent (50%) of these total fees are

to be paid with the initial submittal of plans and engineer's cost estimate. These initial payments will be credited towards the final fees as determined at engineering permit. The remainder of the fee shall be due payable prior to issuance of an engineering permit.

16. Improvement and Grading Inspection fees. The applicant shall pay the improvement and/or grading inspection fee(s) to the Engineering Division prior to the issuance of a single parcel development permit. The current improvement inspection fee is 5.75% of the engineer's estimated cost for improvements. The grading inspection fee is 3% of the engineer's estimated cost of grading. The grading inspection fee may also be based upon an approved engineer's estimate of total cubic yards, according to the current schedule of grading fee charges as set forth in the City's Master Fee Schedule.

17. Facility Reserve Charge. Prior to the issuance of a building permit, the applicant shall pay the City of Pittsburg Facilities Reserve Charge (PMC Chapters 13.08, 13.12 and 13.24) (the "FRC") to the Engineering Division for water and sewer service in the amounts in effect at the time of building permit issuance. The applicant understands that the current FRC on file, effective August 20, 2005, shall be paid in accordance with the fee schedule approved by Resolution No. 05-10290, and amended by Resolution No. 12-11778, on February 21, 2012, a copy of which is available at the City.

18. Local Traffic Mitigation Fee. Prior to issuance of a building permit, the applicant shall pay the Local Transportation Mitigation Fee (PMC Chapter 15.90) (the "LTMF") amount in effect at the time of building permit issuance. The applicant understands that the LTMF is reviewed and adjusted annually to the current Construction Cost Index (CCI) and may be increased at the City Council's discretion based on revised cost estimates for roadway and transit facilities and other factors that demonstrate an increase is needed to offset traffic impacts caused by new development. The LTMF is calculated by dividing the total fee share of improvement costs by the total number of Dwelling Unit Equivalencies ("DUE") in the City, as described in PMC Chapter 15.90 and the Pittsburg Local Transportation Mitigation Fee Program Update, copies of which are available from the City.

19. Regional Traffic Mitigation Fee. Prior to issuance of a building permit, the applicant shall pay the Regional Transportation-Development Impact Mitigation Fee (PMC Chapter 15.103) (the "RTDIM") amount in effect at the time of building permit issuance. The RTDIM will be automatically increased or decreased on January 1 of each year based on the percent change in the Engineering News-Record Construction Costs Index – San Francisco Bay Area, between September 1 and September 1 of the preceding two calendar

years.

20. GIS Update. Prior to the issuance of an engineering permit, the applicant shall pay the Geographic Information System (GIS) fee as set forth in the City's Master Fee Schedule. The current fee is $0.05/sf of parcel for non-residential uses.

21. Supplemental Studies. If additional engineering studies are deemed necessary by the City Engineer, i.e. geotechnical, structural, hydraulic, etc., or expedited reviews are requested by the applicant, the applicant shall pay for all costs related to the extra work. The costs shall be paid at the time of first plan check submittal, and they may include all costs associated with the preparation of special studies, additional staff time, and/or reviews of the special studies if studies are prepared by the applicant's engineer.

Engineering Submittals:

22. Improvement Plans. The applicant shall submit five (5) copies of the engineering plans to the Engineering Division for review and approval. The plans shall be prepared by a registered civil engineer, to include but not be limited to the following:

    a) A Site Plan
    b) A Grading and Drainage Plan
    c) A Utilities Plan
    d) A Landscaping and Irrigation Plan
    e) An Erosion and Sedimentation Control Plan
    f) Offsite Improvements due to Project Impacts

23. Geotechnical Report. The applicant shall submit a current geotechnical report that supports the design features incorporated into this project including, but not limited to, grading activities, compaction requirements, utility construction, slopes, retaining walls, and roadway sections. The geotechnical report shall be submitted to the Engineering Division for review prior to the approval of any civil plans and/or the issuance of a site development permit.

NPDES Requirements:

24. Stormwater Pollutants. The applicant shall incorporate long-term best management practices (BMP's) for the reduction or elimination of storm water pollutants. The project design shall incorporate wherever feasible, the following long term BMPs to limit pollutant generation, discharge, and runoff. Such source control design measures may include:

    a) Incorporating landscaping that minimizes irrigation and runoff, promotes

surface infiltration where possible, minimizes the use of pesticides and fertilizers, and incorporates appropriate sustainable landscaping practices.

b) Providing covered trash, food waste, and compactor enclosures.
c) Using pavers for walkways and other appropriate hardscape surfaces to minimize impervious areas.
d) Minimizing the amount of directly connected impervious surface area.
e) Marking all storm drains with "No Dumping, Drains to Delta" messages.
f) Constructing concrete driveway weakened plane joins at angles to assist in directing run-off to landscaped/pervious areas prior to entering the street curb and gutter.
g) Plumbing of the following discharges to the sanitary sewer, subject to Delta Diablo's authority and standards:

- Discharges from indoor floor mat/equipment/hood filter wash racks or covered outdoor wash racks for restaurant.
- Dumpster drips from covered trash and food compactor enclosures.
- Discharges from outdoor covered wash areas for vehicles, equipment, and accessories.
- Fire sprinkler test water, if discharge to onsite vegetated areas is not a feasible option.

25. Stormwater Pollution Protection During Construction. Prior to the issuance of a grading permit, the applicant shall submit an Erosion and Sedimentation Control Plan or Stormwater Pollution prevention Plan (if the project requires a permit from the State Water Resources Control Board under the provisions of the General Construction Permit) to the Engineering Division for review. The Stormwater Pollution Prevention Plan measures shall also include measures to prevent soil, dirt, and debris from entering the storm drain system, in accordance with California Stormwater Quality Association's (CASQA's) construction handbook.

26. Off-Site Capacity Evaluation. The applicant shall evaluate the existing, receiving storm, sewer, and water facilities for adequate capacity and provide the results to the City to identify any service or supply problems. The cost for installation of additional facilities required to be constructed to accommodate the project shall be borne by the applicant.

27. Sanitary Sewer. The applicant shall provide 6-inch sanitary sewer lateral located 5-feet horizontally from the water service lateral, with a two-way cleanout at the property line.

Engineering Exactions (CFD inclusion):

28. Annexation Documentation for CFD 2005-1. The applicant shall agree to annex into the Community Facilities District 2005-1, which is for public safety services. The fees collected will provide funding for an increase of police

coverage in the area. The rate of the CFD 2005-1 fee is subject to City Council Resolution No. 05-10342. The applicant shall deliver written approval in a manner acceptable to the Community Development Director, that the owner of the parcel is electing to annex the subject property into the 2005-1 Public Safety Services Community Facilities District (CFD 2005-1), prior to the issuance of any building or engineering permits.

29. Annexation Documentation for CFD 2017-1. The applicant shall agree to annex into the Community Facilities District 2017-1, which is for fire facilities and fire safety and emergency services. The rate of the CFD 2017-1 fee is subject to City Council Resolution No. 17-13311. The applicant shall deliver written approval in a manner acceptable to the Community Development Director, that the owner of the parcel is electing to annex the subject property into the 21017-1 Fire Facilities and Fire Safety and Emergency Services Community Facilities District (CFD 2017-1), prior to the issuance of any building or engineering permits.

Standard Conditions:

30. Other Agency Requirements. The applicant shall comply with all the requirements of the Community Development Department, Contra Costa County Fire Protection District, Delta Diablo Sanitation District, and all other applicable local, state and federal agencies. It is the responsibility of the applicant to contact each local, state, or federal agency for requirements that may pertain to this project.

31. Standard Conditions of Development. The Standard Conditions of Development as adopted by the Pittsburg Planning Commission by Resolution No. 8931 shall apply as conditions of approval for this project as applicable. Where there is conflict between the Standard Conditions of Development and the specific conditions of approval specified in this resolution, the specific conditions of this Resolution No. 10123 shall govern.

32. Indemnification. Applicant agrees to indemnify, defend, and hold harmless the City, its officials, officers, employees, agents and consultants from any and all administrative, legal or equitable actions or other proceedings instituted by any person challenging the validity of this project approval, subsequent project approval, or other action arising out of, or in connection with, this project approval. The parties shall cooperate in defending such action or proceeding. The parties shall use reasonable efforts to select mutually agreeable defense counsel but, if the parties cannot reach agreement, City may select its own legal counsel at applicant's sole cost and expense. Applicant may select its own legal counsel to represent applicant's interests at applicant's sole cost and expense. Applicant shall pay for City's costs of defense, whether directly or by timely reimbursement to City on a monthly basis. Such costs shall include, but not be limited to, all court costs and attorneys' fees expended by

City in defense of any such action or other proceeding, plus staff and City Attorney time spent responding to and defending the claim, action or proceeding.

33. Expiration of Approval. This design review approval will expire on July 23, 2021, unless a building permit or grading permit has been issued for purposes of construction of this project, or a written request for an extension is filed with the Planning Division prior to the expiration date and is subsequently approved by the Planning Commission. The approval shall be valid for no more than six months from the date of permit issuance, unless work is commenced and diligently pursued prior to the expiration of the permit.

Section 4. Effective Date

This resolution shall take effect immediately upon its adoption.

On motion by Commissioner _____, seconded by Commissioner _____, the foregoing resolution was passed and adopted the 23rd day of July, 2019, by the Planning Commission of the City of Pittsburg, California by the following vote:

AYES:

NAYES:

ABSTAIN:

ABSENT:

I hereby certify that the above Resolution No. 10123 was adopted by the Planning Commission of the City of Pittsburg on July 23, 2019.

_____
KRISTIN POLLOT, AICP, SECRETARY
PITTSBURG PLANNING COMMISSION

1 / A0 (E) LOT KEY PLAN
NTS

PROJECT DIRECTORY

CLIENT:
JOSE DELGADO
PO BOX 14461, FREMONT, CA, 94539
(510) 557–0661

ARCHITECT:
ArcHive
1143 SHRADER ST. SAN FRANCISCO, CA 94117
(415) 323–0729

GOVERNMENT AGENCIES:
CITY OF PITTSBURG
PLANNING DEPARTMENT
65 CIVIC AVE, PITTSBURG, CA 94565
(925) 252–4920

SCOPE OF WORK

SITE IMPROVEMENTS

INSTALL (N) MOBILE OFFICE TRAILER: 480 SF
INSTALL (N) ELECTRICAL METER AND PANEL
INSTALL (N) WASTE WATER TO FROM (E) STREET CONNECTION
INSTALL (N) WATER SUPPLY CONNECTION FROM (E) STREET CONNECTION
INSTALL (N) TRASH ENCLOSURE
PROVIDE (N) PARKING AREA

5 INDUSTRY RD, PITTSBURG, CA, 94565
JOSE DELGADO
(510) 557–0661

CODES & STANDARDS

PART 1 – 2016 CALIFORNIA ADMINISTRATIVE CODE, PART 1, TITLE 24, CALIFORNIA CODE OF REGULATIONS (CCR)
PART 2 – 2016 CALIFORNIA BUILDING CODE (CBC), PART 2, TITLE 24, CCR (2015 IBC AS AMENDED BY THE STATE OF CALIFORNIA & THE CITY OF PITTSBURG)
PART 2.5– 2016 CALIFORNIA BUILDING CODE (CBC), PART 2, TITLE 24, CCR (2015 IBC AS AMENDED BY THE STATE OF CALIFORNIA & THE CITY OF PITTSBURG)
PART 3 – 2016 CALIFORNIA ELECTRICAL CODE (CEC), PART 3, TITLE 24, CCR (2015 NEC AS AMENDED BY THE STATE OF CALIFORNIA & THE CITY OF PITTSBURG)
PART 4 – 2016 CALIFORNIA MECHANICAL CODE (CMC), PART 4, TITLE 24, CCR (2015 UMC AS AMENDED BY THE STATE OF CALIFORNIA & THE CITY OF PITTSBURG)
PART 5 – 2016 CALIFORNIA PLUMBING CODE (CPC), PART 5, TITLE 24, CCR (2015 UPC AS AMENDED BY THE STATE OF CALIFORNIA & THE CITY OF PITTSBURG)
PART 6 – 2016 CALIFORNIA ENERGY CODE, PART 6, TITLE 24, CCR
PART 9 – 2016 CALIFORNIA FIRE CODE (CFC), PART 9, TITLE 24, CCR
PART 11 – 2016 CALIFORNIA GREEN BUILDING STANDARDS CODE, PART 11, TITLE 24, CCR
PART 12 – 2016 CALIFORNIA REFERENCE STANDARDS CODE, PART 12, TITLE 24, CCR

DEMOLITION GENERAL NOTES

1. ALL DEMOLITION WORK SHALL MEET REQUIREMENTS OF THE LATEST EDITION OF THE CALIFORNIA BUILDING CODE, CALIFORNIA MECHANICAL CODE, CALIFORNIA PLUMBING CODE, NATIONAL ELECTRICAL CODE & ALL OTHER APPLICABLE REGULATIONS & ORDINANCES INCLUDING ANY AMENDMENTS BY THE CITY OF PITTSBURG.
2. REMOVE & SALVAGE ALL EQUIPMENT & OTHER ITEMS AS DESIGNATED BY OWNER & STORE ITEMS AT A LOCATION DESIGNATED BY OWNER.
3. REMOVE ALL PLUMBING FIXTURES, FITTINGS, FLOOR DRAINS, SUPPLY & WASTE PIPE AS NEEDED. CAP PIPES & VENTS TO REMAIN. PATCH ANY PENETRATIONS THROUGH ROOF & EXTERIOR WALLS. ALL WORK SHALL BE DONE BY AN QUALIFIED PLUMBER.
4. REMOVE ALL SWITCHES, J–BOXES, CONDUITS, WIRING & OTHER ITEMS IN (E) WALLS & CEILING AREAS AS NEEDED FOR (N) WORK. CONDUCTORS SHALL BE REMOVED ALL THE WAY BACK TO A ELEC. SUB PANEL OR A J–BOX IN AN (E) WALL TO REMAIN. ALL WORK SHALL BE DONE BY AN QUALIFIED ELECTRICIAN.
5. REMOVE ALL DOORS, WINDOWS & WALLS AS NEEDED FOR (N) WORK. CONSULT ARCHITECT WHERE NECESSARY FOR EXTENT OF DEMOLITION. REMOVE INTERIOR WALL FINISHES TO FRAMING SUBSTRATE AS NEEDED.
6. SAWCUT (E) CONCRETE SLAB AS NEEDED FOR (N) WORK. PATCH & FILL (E) SLAB AS NECESSARY TO PROVIDE A SUITABLE SUBSTRATE FOR (N) FINISH.
7. DEMOLITION CONTRACTOR SHALL BRACE & SHORE (E) STRUCTURE AS NECESSARY DURING DEMOLITION & REMOVAL PROCEDURES.
8. CONTRACTOR SHALL PROTECT ALL STRUCTURES, UTILITIES, LANDSCAPING, ETC., THAT ARE TO REMAIN. ANY DAMAGE DUE TO THE CONTRACTORS NEGLIGENCE SHALL BE REPAIRED BY THE CONTRACTOR AT NO COST TO THE OWNER.
9. CONTRACTOR SHALL REMOVE ALL DEMOLITION MATERIALS OFF SITE PROMPTLY. DEBRIS SHALL NOT BE ALLOWED TO ACCUMULATE AND CREATE A NUISENCE.
10. NOTE: (E) BUILDING IS AN OCCUPIED FACILITY. COORDINATE ALL WORK W/ OWNER'S DESIGNATED REPRESENTATIVE DURING ALL CONSTRUCTION PROCEDURES.
11. DOCUMENTATION WILL BE PROVIDED, PRIOR TO FIRST INSPECTION, CONFIRMING COMPLIANCE TO THE WASTE MANAGEMENT PLAN PROVIDED TO THE JURISDICTION.
12. AT FINAL INSPECTION, A MANUAL, COMPACT DISC, WEB–BASED REFERENCE, OR OTHER ACCEPTABLE MEDIA INCLUDING ITEMS 1–10 IN ACCORDANCE WITH CGBSC SECTION 4.410.1 SHALL BE PLACED IN THE BUILDING.

BUILDING DATA

APPLICABLE CODE	2016 CBC WITH CITY OF PITTSBURG AMENDMENTS
(E) TYPE OF CONSTRUCTION	–
TOTAL LOT SIZE	9183 S.F.
–MAX FLOOR AREA RATIO: 40%	3673 S.F.
(E) BUILDINGS	0 S.F.
(N) MODULAR OFFICE TRAILER (NOT PERMANENT)	600 S.F.
(N) TRASH ENCLOSURE	245 S.F.
NUMBER OF STORIES	ONE
SPRINKLER SYSTEM	NO
BUILDING USE	COMMERCIAL
ZONING	CW
OCCUPANCY TYPE	U
EXITS REQUIRED	1 EXIT
EXITS PROVIDED	2 EXITS
APN#	073042012

CALGREEN NOTES

1. ALL ADHESIVES, SEALANTS, CAULKS, PAINTS, COATINGS, AND AEROSOL PAINT CONTAINERS MUST REMAIN ON THE SITE FOR FIELD VERIFICATION BY THE BUILDING INSPECTOR. CGBSC 4.504.2.4
2. PRIOR TO FINAL INSPECTION, A LETTER SIGNED BY THE GENERAL CONTRACTOR OR THE OWNER/BUILDER (FOR ANY OWNER/BUILDER PROJECTS) MUST BE PROVIDED TO THE CITY OF WALNUT CREEK BUILDING OFFICIAL CERTIFYING THAT ALL ADHESIVES, SEALANTS, CAULKS, PAINTS, COATINGS, AEROSOL PAINTS AEROSOL COATINGS, CARPET SYSTEMS (INCLUDING CARPETING, CUSHION, AND ADHESIVE), RESILIENT FLOORING SYSTEMS, AND COMPOSITE WOOD PRODUCTS INSTALLED ON THIS PROJECT ARE WITHIN THE EMISSION LIMITS SPECIFIED IN CGBSC SECTION 4.504.

PLUMBING NOTES

VERIFICATION OF REPLACEMENT OF ALL EXISTING TO REMAIN NON–COMPLIANT PLUMBING FIXTURES WITH WATER–CONSERVING PLUMBING FIXTURES AS SPECIFIED IN CIVIL CODE SECTION 1101.1–1101.8, SHALL BE PROVIDED TO THE CITY BUILDING INSPECTOR, PRIOR TO FINAL INSPECTION. THIS REQUIREMENT APPLIES TO ALL EXISTING TO REMAIN PLUMBING FIXTURES LOCATED WITHIN THE STRUCTURE UNDER THE SCOPE OF THIS PERMIT.

ABBREVIATIONS

&	AND
@	AT
#	NUMBER OR POUND
(E)	EXISTING
(F)	FUTURE
(N)	NEW (PROVIDE & INSTALL)
(R)	REINSTALLED
A.B.	ANCHOR BOLT
A/C	AIR CONDITIONING
A.C.	ASPHALTIC CONCRETE
A.C.T.	ACOUSTICAL CEILING TILE
ADJ.	ADJUSTABLE
AGGR.	AGGREGATE
ALUM.	ALUMINUM
ALT.	ALTERNATE
ANOD.	ANODIZED
APPROX.	APPROXIMATE
ARCH.	ARCHITECTURAL
B.	BACK OF, OR BOTTOM OF
BLDG.	BUILDING
BLK.	BLOCK
BM.	BEAM
B.O.J.	BOTTOM OF JOISTS
BOT.	BOTTOM
B.U.R.	BUILT–UP ROOFING
CEM.	CEMENT
CER.	CERAMIC
C.I.	CAST IRON
C.J.	CONSTRUCTION JOINT OR COLD JOINT
CLG.	CEILING
CLR.	CLEAR
CONC.	CONCRETE
CONSTR.	CONSTRUCTION
CONT.	CONTINUOUS
CONTR.	CONTRACTOR
CORR.	CORRIDOR
DBL.	DOUBLE
DET.	DETAIL
D.F.	DRINKING FOUNTAIN
DIA.	DIAMETER
DIM.	DIMENSION
DN.	DOWN
D.O.	DOOR OPENING
DR.	DOOR
D.S.	DOWNSPOUT
DWG.	DRAWING
EA.	EACH
E.J.	EXPANSION JOINT
ELEV.	ELEVATION
ELEC.	ELECTRICAL
E.N.	ENDNAIL
EQ.	EQUAL
E.S.	EXPANSION SHIELD
EXP.	EXPANSION
EXT.	EXTERIOR
FIN.	FINISH
FL.	FLOOR
F.D.	FLOOR DRAIN
F.O.C.	FACE OF CONCRETE
F.O.F.	FACE OF FINISH
F.O.S.	FACE OF STUDS
FT.	FOOT OR FEET
FTG.	FOOTING
FURR.	FURRING
GA.	GAUGE
GALV.	GALVANIZED
G.B.	GRAB BAR
GL.	GLASS
GR.	GRADE
G.S.M.	GALVANIZED SHEET METAL
G.W.B.	GYPSUM WALL BOARD
HC.	HANDICAPPED
HDR.	HEADER
HDWE.	HARDWARE
H.M.	HOLLOW METAL
HORIZ.	HORIZONTAL
HR.	HOUR
HVAC	HEATING/VENTILATION/ AIR CONDITIONING
HT.	HEIGHT
I.A.W.	IN ACCORDANCE WITH
I.D.	INSIDE DIAMETER
INSUL.	INSULATION
K.P.	KICKPLATE
LAB.	LABORATORY
LT.	LIGHT
MAT.	MATERIAL
MAX.	MAXIMUM
M.B.	MACHINE BOLT
MECH.	MECHANICAL
MEMB.	MEMBRANE
MFR.	MANUFACTURER
MIN.	MINIMUM OR MINUTE
MISC.	MISCELLANEOUS
M.S.	MACHINE SCREW
MTD.	MOUNTED
MTL.	METAL
N.I.C.	NOT IN CONTRACT
NO.	NUMBER
NOM.	NOMINAL
N.T.S.	NOT TO SCALE
O/	OVER
OBS.	OBSCURE
O.C.	ON CENTER
O.D.	OUTSIDE DIAMETER
OFF.	OFFICE
OPNG.	OPENING
OPP.	OPPOSITE
P.B.	PANIC BAR
PARA.	PARAGRAPH
P.D.F.	POWDER DRIVEN FASTENER
PL.	PLATE
P.LAM.	PLASTIC LAMINATE
PLAS.	PLASTER
PLYWD.	PLYWOOD
P.O.C.	POINT OF CONNECTION
PR.	PAIR
P.T.	PRESSURE TREATED
PT.	POINT
PTN.	PARTITION
REF.	REFERENCE
REINF.	REINFORCE OR REINFORCING
RM.	ROOM
R.O.	ROUGH OPENING
SCHED.	SCHEDULE
SECT.	SECTION
SH.	SHELF
SHT.	SHEET
SHTG.	SHEATHING
SIM.	SIMILAR
S.M.	SHEET METAL
S.M.S.	SHEET METAL SCREW
SPEC.	SPECIFICATION
SQ.	SQUARE
SST.	STAINLESS STEEL
STD.	STANDARD
STRUCT.	STRUCTURAL
STL.	STEEL
SUSP.	SUSPENDED
SYM.	SYMMETRICAL
TEL.	TELEPHONE
THK.	THICK
T.B.R.	TO BE REMOVED
T.N.	TOENAIL
T.P.	TOILET PAPER HOLDER
T.S.	TOP OF SLAB
TYP.	TYPICAL
UNF.	UNFINISHED
U.O.N.	UNLESS OTHERWISE NOTED
V.C.T.	VINYL COMPOSITION TILE
VERT.	VERTICAL
V.W.C.	VINYL WALL COVERING
W/O	WITHOUT
WP.	WATERPROOF
WS.	WEATHERSTRIPPING
WSCT.	WAINSCOT
WT.	WEIGHT
W.W.F.	WELDED WIRE FABRIC

SYMBOLS

ENTRY 101	ROOM NAME & NUMBER	A / A3	BUILDING SECTION
101	DOOR NUMBER	1 / A4	ELEVATION TARGET
B	WINDOW TYPE	2 / A3	WALL SECTION
A	SHEET NOTE	1 / A5	DETAIL TARGET
1 / 4 A3 2 / 3	ROOM ELEVATIONS		(E) ITEM TO BE REMOVED
G	GRID REFERENCE		(E) ITEM TO REMAIN
		(R)	(E) ITEM TO BE RELOCATED
	PROJECT NORTH		(N) ITEM

SHEET INDEX

SHT. NO.	DWG. NO.	SHEET TITLE
1	A0	TITLE SHEET / KEY PLAN
2	A1	SITE/NEIGHBORHOOD PLAN
3	A2	SITE PLAN
4	A3	EGRESS DIAGRAM
5	A4	TRASH ENCLOSURE ELEVATIONS
6	ADDENDA	MOBILE OFFICE TRAILER SPECS & PHOTOS
7	ADDENDA	STANDARD DETAILS WATER SUPPLY & WASTE

	BY
–	–

LICENSED ARCHITECT SHAUM MEHRA C–36812 REN. 04–30–21 STATE OF CALIFORNIA

ArcHive
1143 SHRADER ST. SAN FRANCISCO, CA, 94117
831 239 5432

THESE DRAWINGS AND SPECIFICATIONS ARE THE PROPERTY AND COPYRIGHT OF THE ARCHITECT AND SHALL NOT BE USED ON ANY OTHER WORK EXCEPT BY WRITTEN PERMISSION FROM THE ARCHITECT. DO NOT SCALE DRAWINGS. THE DIMENSIONS SHALL BE VERIFIED ON THE SITE. ANY DISCREPANCY SHALL BE BROUGHT TO THE NOTICE OF THE ARCHITECT PRIOR TO THE COMMENCEMENT OF ANY WORK.

SITE IMPROVEMENTS
5 INDUSTRY RD, PITTSBURG, CA, 94565
OWNERS: JOSE DELGADO

TITLE SHEET
KEY PLAN

DATE: 7–11–19
SCALE: AS NOTED
DRAWN: SM/SM
JOB # 1901

DRAWING NUMBER
A0

1 OF – SHEETS

SERVICE POLE

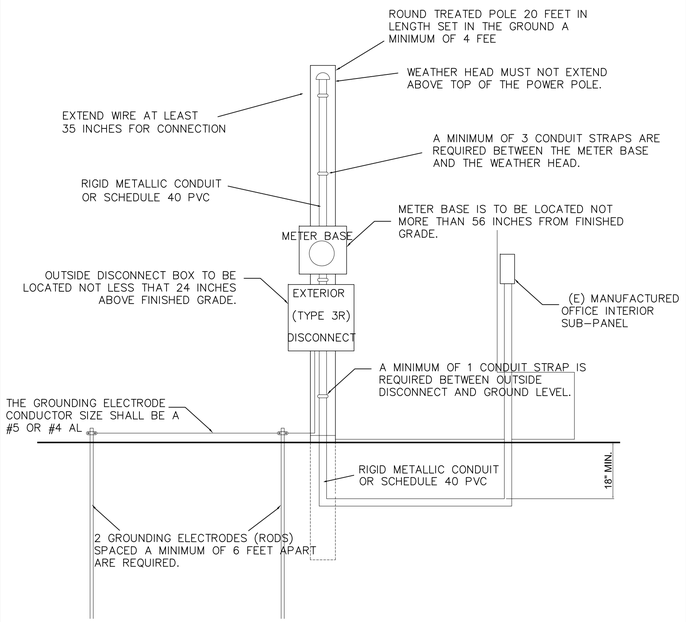

GROUNDING ELECTRODES (RODS) SHALL BE AT LEAST:
INCH X 8 FEET GALVANIZED IRON OR STEEL.
INCH X 8 FEET COPPER WELD.
INCH X 8 FEET GALVANIZED PIPE.

GENERAL NOTES

–A MINIMUM OF 12 FEET IS REQUIRED FROM GROUND LEVEL TO THE WEATHER HEAD.

–THE MANUFACTURED HOME SERVICE SHALL BE SIZED IN ACCORDANCE TO THE MANUFACTURED HOME'S INSTALLATION REQUIREMENTS.

–OUTSIDE DISONNECT BREAKER SIZE SHALL BE EQUAL TO THE SUB PANEL INTERIOR BREAKER SIZE.

–SERVICE ENTRANCE CABLES SHALL BE RATED FOR DIRECT BURIAL OR BE TOTALLY RUN IN CONDUIT.

–WHEN SERVICE ENTRANCE CABLE IS IN CONDUIT, THE MINIMUM BURIAL DEPTH SHALL BE 18 INCHES BELOW GRADE.

–A 4 WIRE, INSULATED SERVICE ENTRANCE CABLEIS REQUIRED.

–FOR 200A SERVICE= $\frac{2}{0}$ CU OR $\frac{2}{0}$ AL

–THE 4TH WIRE GROUNDING CONDUCTOR MINIMUM SIZE SHALL BE THE #6 CU OR #4 AL INSULATED WIRE COLOR CODED GREEN.

2/A1 ELECTRICAL SUPPLY DETAIL
NTS

NOTE:
ALL DIMENSIONS ARE TO F.O.F. U.O.N.

NOTE:
CONSULT ARCHITECT IF EXISTING BUILDING CONDITIONS ARE DIFFERENT THAN INDICATED.

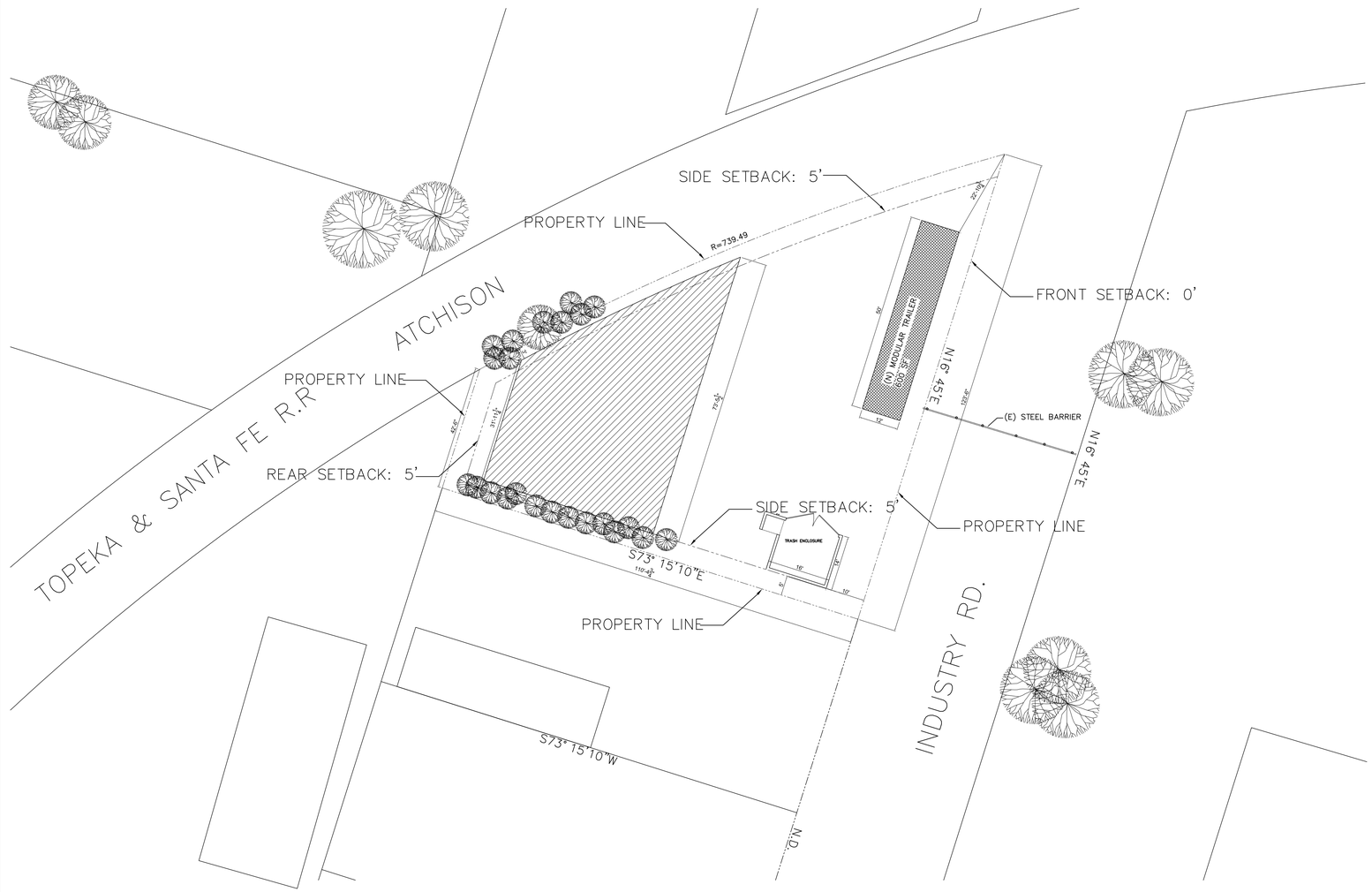

LEGEND

(N) MOBILE OFFICE TRAILER
(E) CONCRETE SLAB
(N) ASPHALT

1/A1 SITE PLAN
1/16" = 1'-0"

REV.	DATE	BY
–	–	–

LICENSED ARCHITECT SHAUN MEHRA C-36812 REN. 04-30-21 STATE OF CALIFORNIA

ArcHive
1143 SHRADER ST. SAN FRANCISCO, CA, 94117
(415) 323-0729

THESE DRAWINGS AND SPECIFICATIONS ARE THE PROPERTY AND COPYRIGHT OF THE ARCHITECT AND SHALL NOT BE USED ON ANY OTHER WORK EXCEPT BY WRITTEN PERMISSION FROM THE ARCHITECT. DO NOT SCALE DRAWINGS. DIMENSIONS SHALL BE VERIFIED ON THE JOB SITE. ANY DISCREPANCY SHALL BE BROUGHT TO THE NOTICE OF THE ARCHITECT PRIOR TO THE COMMENCEMENT OF ANY WORK.

SITE IMPROVEMENTS
5 INDUSTRY RD, PITTSBURG, CA, 94565
OWNER: JOSE DELGADO

NEIGHBORHOOD PLAN
–

DATE:	7-11-19
SCALE:	AS NOTED
DRAWN:	SM/SI
JOB #	1901

DRAWING NUMBER
A1

1 OF – SHEETS

LANDSCAPING NOTE:
TOTAL LANDSCAPED AREA: 1590 SQ. FT.
18% OF TOTAL LOT AREA.
TREE TYPES:
–PURPLE LEAF PLUM
–GINKO
SHRUBS & VINES:
–CAMPSIS
–ITALIAN BUCKTHORN

NOTE:
ALL DIMENSIONS ARE TO F.O.F. U.O.N.

NOTE:
CONSULT ARCHITECT IF EXISTING BUILDING CONDITIONS ARE DIFFERENT THAN INDICATED.

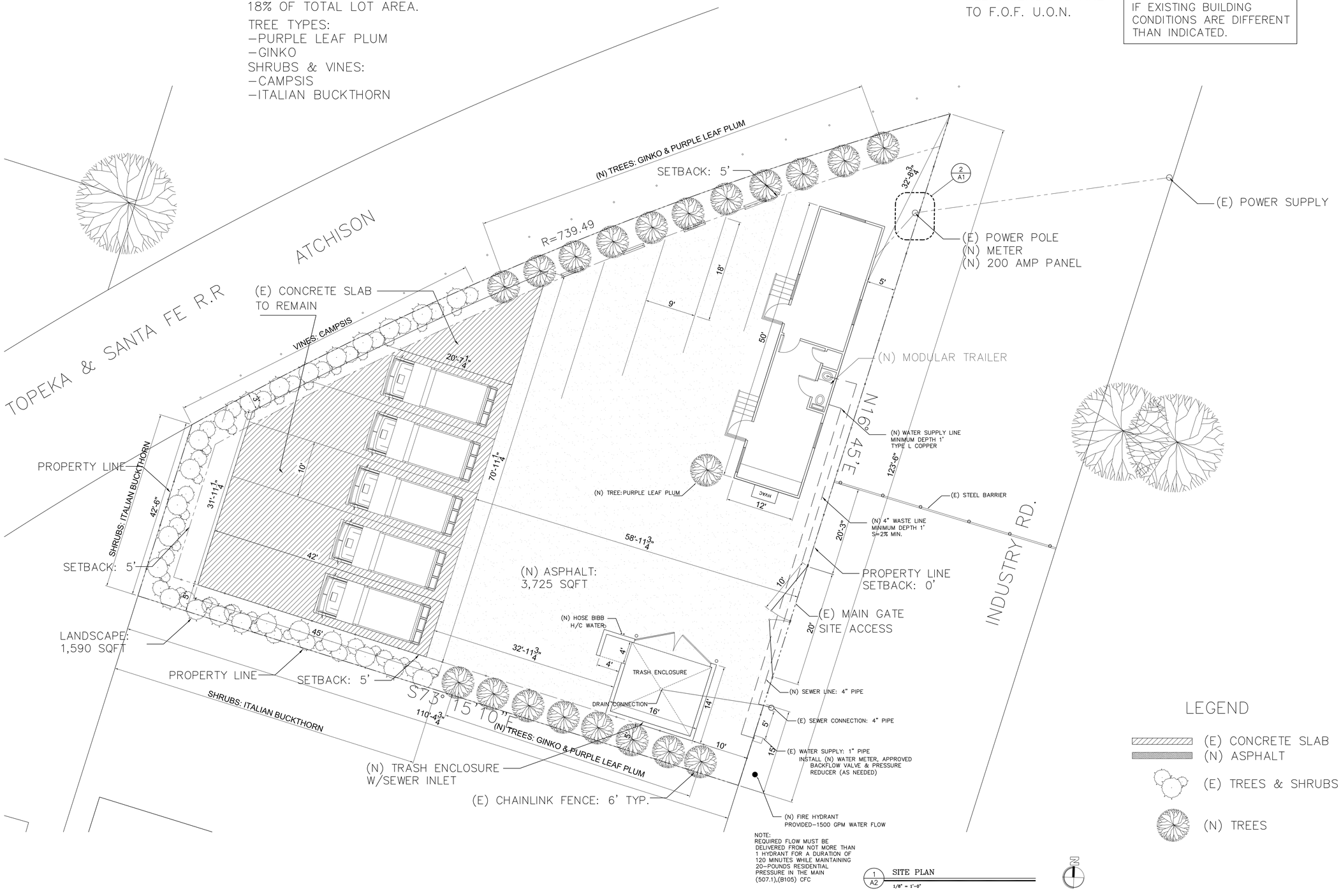

1 A2 SITE PLAN
1/8" = 1'-0"

LEGEND
(E) CONCRETE SLAB
(N) ASPHALT
(E) TREES & SHRUBS
(N) TREES

REV.	DATE	BY
–	–	–

LICENSED ARCHITECT SHAUM MEHRA C–36812 REN. 04–30–19 STATE OF CALIFORNIA

ArcHive
1143 SHRADER ST. SAN FRANCISCO, CA, 94117
(415) 323–0729

THESE DRAWINGS AND SPECIFICATIONS ARE THE PROPERTY AND COPYRIGHT OF THE ARCHITECT AND SHALL NOT BE USED ON ANY OTHER WORK EXCEPT BY WRITTEN PERMISSION FROM THE ARCHITECT. DO NOT SCALE DRAWINGS. DIMENSIONS SHALL BE VERIFIED ON THE JOB SITE. ANY DISCREPANCY SHALL BE BROUGHT TO THE NOTICE OF THE ARCHITECT PRIOR TO THE COMMENCEMENT OF ANY WORK.

SITE IMPROVEMENTS
5 INDUSTRY RD, PITTSBURG, CA, 94565
OWNER: JOSE DELGADO

SITE PLAN
–

DATE: 7–11–19
SCALE: AS NOTED
DRAWN: SM/SI
JOB # 1901
DRAWING NUMBER
A2
1 OF – SHEETS

NOTE:
ALL DIMENSIONS ARE TO F.O.F. U.O.N.

NOTE:
CONSULT ARCHITECT IF EXISTING BUILDING CONDITIONS ARE DIFFERENT THAN INDICATED.

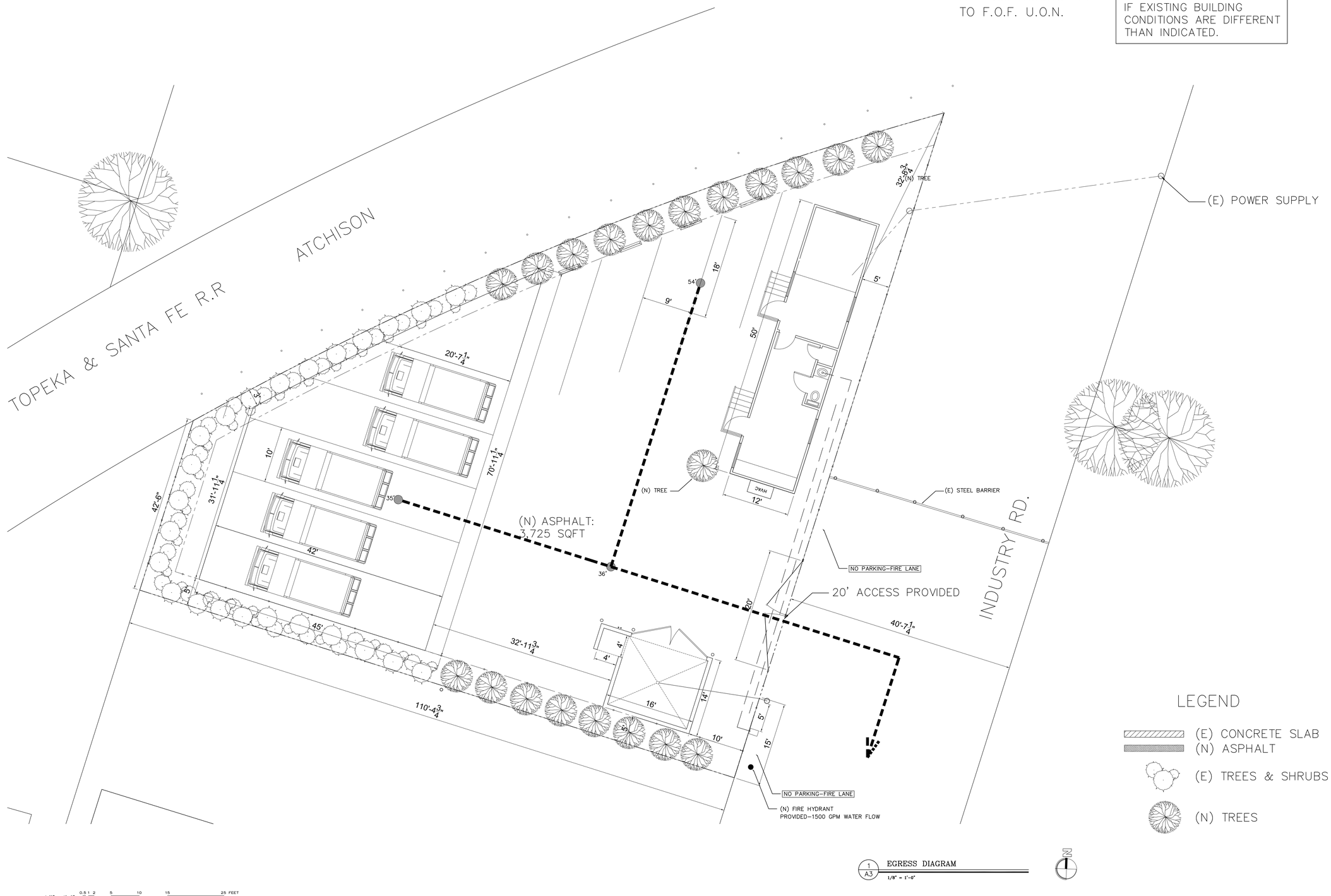

1 / A3 EGRESS DIAGRAM
1/8" = 1'-0"

REV.	DATE	BY
–	–	–

LICENSED ARCHITECT
SHAUM MEHRA
C–36812
REN. 04-30-21
STATE OF CALIFORNIA

ArcHive
1143 SHRADER ST. SAN FRANCISCO, CA, 94117
(415) 323–0729

THESE DRAWINGS AND SPECIFICATIONS ARE THE PROPERTY AND COPYRIGHT OF THE ARCHITECT AND SHALL NOT BE USED ON ANY OTHER WORK, EXCEPT BY WRITTEN AGREEMENT WITH THE ARCHITECT. DIMENSIONS NOT SCALE DRAWINGS. DIMENSIONS SHALL BE VERIFIED ON THE JOB SITE. ANY DISCREPANCY SHALL BE BROUGHT TO THE NOTICE OF THE ARCHITECT PRIOR TO THE COMMENCEMENT OF ANY WORK.

SITE IMPROVEMENTS
5 INDUSTRY RD, PITTSBURG, CA, 94565
OWNER: JOSE DELGADO

EGRESS DIAGRAM
–

DATE:	7–11–19
SCALE:	AS NOTED
DRAWN:	SM/SI
JOB #	1901

DRAWING NUMBER
A3

1 OF – SHEETS

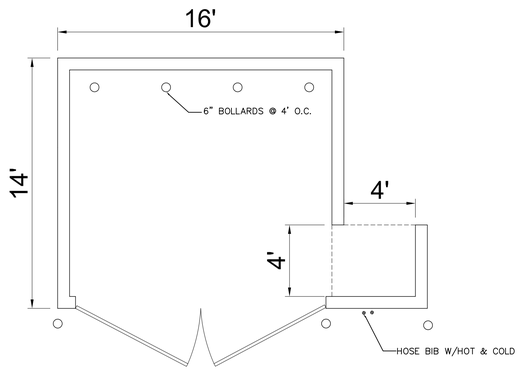

2 / A4 (N) TRASH ENCLOSURE PLAN
1/2" = 1'-0"

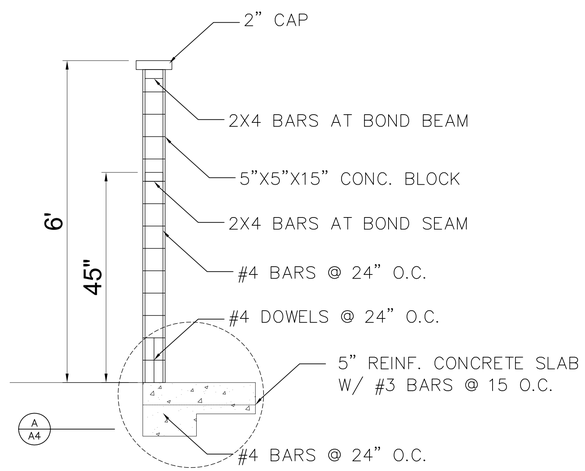

TYPICAL WALL DETAIL 4 / A4
NTS

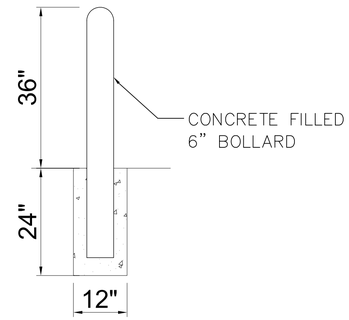

TYPICAL BOLLARD DETAIL 5 / A4
NTS

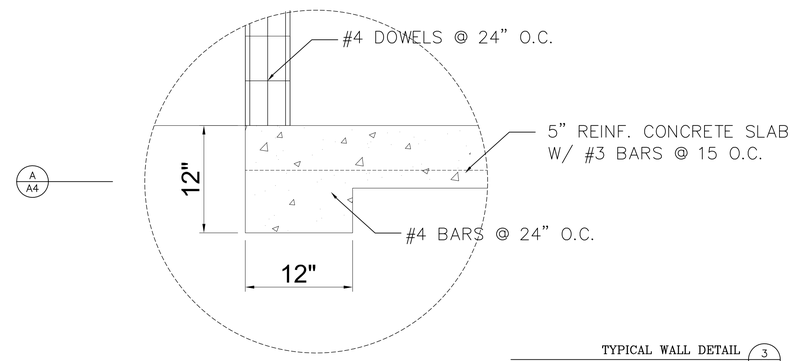

TYPICAL WALL DETAIL 3 / A4
NTS

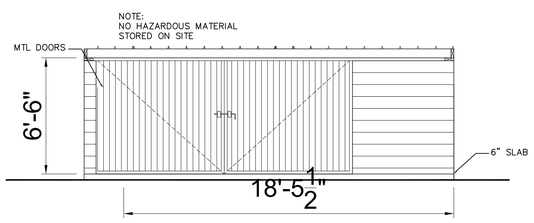

SOUTH ELEVATION D / A4

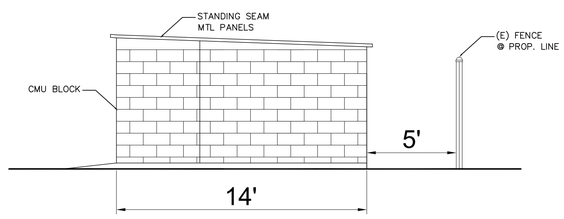

WEST ELEVATION C / A4

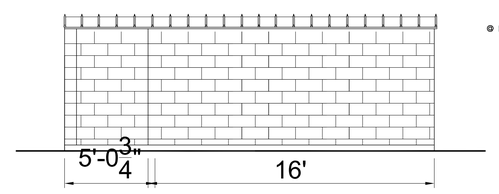

NORTH ELEVATION B / A4

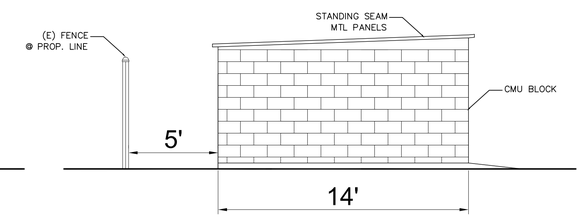

EAST ELEVATION A / A4

1 / A4 (N) TRASH ENCLOSURE ELEVATIONS
1/4" = 1'-0"

REV.	DATE	BY
–	–	–

LICENSED ARCHITECT
SHAUN MEHRA
C-36812
REN. 04-30-21
STATE OF CALIFORNIA

Archive
1143 SHRADER ST. SAN FRANCISCO, CA, 94117
(415) 323-0729

THESE DRAWINGS AND SPECIFICATIONS ARE THE PROPERTY AND COPYRIGHT OF THE ARCHITECT AND SHALL NOT BE USED ON ANOTHER WORK EXCEPT BY WRITTEN PERMISSION FROM THE ARCHITECT. DO NOT SCALE DRAWINGS. DIMENSIONS SHALL BE VERIFIED ON THE JOB SITE. ANY DISCREPANCY SHALL BE BROUGHT TO THE NOTICE OF THE ARCHITECT PRIOR TO THE COMMENCEMENT OF ANY WORK.

RESIDENTIAL ADDITION
5 INDUSTRY RD, PITTSBURG, CA, 94565
OWNER: JOSE DELGADO

TRASH ENCLOSURE ELEVATIONS
TRASH ENCLOSURE DETAILS

DATE:	7-11-19
SCALE:	AS NOTED
DRAWN:	SM/SI
JOB #	1804

DRAWING NUMBER
A4

1 OF – SHEETS

Attachment 3
Map of Surrounding Uses
Best Care Fumigation, AP-19-1415 (DR)

Project Site

Attachment 4
Applicable General Plan Goals and Policies
Best Care Fumigation, AP-19-1415 (DR)

General Plan Goal/Policy	Analysis
Land Use Element:	
2-G-1: Maintain a compact urban form within the City's projected municipal boundary. Ensure that hillside lands not environmentally suitable for development are maintained as open space.	**Consistent.** The proposed project would occur within city limits on a project site of less than 5 acres and is not located in an Open Space District.
2-G-3: Emphasize concentrated commercial development, rather than linear commercial strips.	**Consistent.** The proposed project is located on a site within an existing industrial center.
2-G-6: Maintain programs and provide incentives for use of vacant infill land and reuse and revitalization of underutilized sites.	**Consistent.** The proposed project would occur on a vacant underutilized site.
2-P-7: During development review, consider project compatibility with existing surrounding land uses. Ensure that sensitive uses—such as residences, schools, and parks—are not subject to hazardous or unhealthy conditions.	**Consistent.** The project site is in the 'Downtown Subarea' of the General Plan and has a land use designation of 'Marine Commercial'. Surrounding uses include industrial uses. The proposed project would be compatible with the surrounding uses in that the contractor use is permitted in this district and is compatible with the surrounding industrial uses.
Growth Management:	
3-G-1: Manage the City's growth to balance development of housing options and job opportunities, protection of open space and habitat areas, construction of transportation improvements, and preservation of high quality public facilities.	**Consistent.** The proposed project would not be located in an open space zoning designation and the use is a permitted use in the waterfront commercial zoning district in which it is located. Further, the proposed project would provide employment opportunities.
3-G-4: Maintain programs and provide incentives for use of vacant infill land and reuse and revitalization of underutilized sites. (Land Use Goal 2-G-6)	**Consistent.** The proposed project would occur on a vacant underutilized site.
3-P-1: Allow urban and suburban development only in areas where public facilities and infrastructure (police, fire, parks, water, sewer, storm drainage, and community facilities) are available or can be provided.	**Consistent.** The project site is in an area where infrastructure can be provided.
3-P-2: Prior to project approval, ensure that the existing and planned transportation system will have adequate capacity to accommodate new urban development.	**Consistent.** The project site is within 1/3 mile of a bus stop for weekday route 387.
Downtown Element	
5-G-3: Encourage a variety of land uses and mixed-use developments at appropriate locations within the Downtown.	**Consistent.** The proposed project would be an industrial use within an industrial area in the downtown.

5-P-28: Ensure that new construction and remodeling throughout Downtown (including the New York Landing Historical District) are reviewed for design compatibility by the Planning Commission.	**Consistent.** The proposed project is being presented before the Planning Commission.
Economic Development Element	
6-G-4: Maintain and enhance an attractive climate for conducting business in Pittsburg.	**Consistent.** The proposed site improvements with this project would enhance the area and provide a more attractive climate for conducting business.
Transportation Element	
7-P-30: Work with Tri-Delta and planning area residents to plan for local bus routes that more effectively serve potential riders within local neighborhoods.	**Consistent.** The project site is within 1/3 mile of a bus stop for weekday route 387.
Resource Conservation Element	
9-G-10: Reduce the potential for human discomfort or illness due to local concentrations of toxic contaminants, odors and dust.	**Consistent.** There would be no storage of fumigation equipment on the ground. Items will be stored either in the trucks or in the office trailer.
9-P-19: As part of the City's Zoning Ordinance, establish regulations for the preservation of mature trees. Include measures for the replacement of all mature trees removed.	**Consistent.** There would be no trees removed in conjunction with this project. Additional trees would be planted.
Health and Safety Element	
10-G-7: Locate development outside of flood-prone areas unless mitigation of flood risk is assured.	**Consistent.** The proposed project is located and entirely contained in an area of 0.2 percent annual chance flood hazard (Zone X).
10-P-16: Ensure compliance with the current Uniform Building Code during development review. Explore programs that would build incentives to retrofit unreinforced masonry buildings.	**Consistent.** The proposed project would be conditioned to comply with all the requirements of the Community Development Department, Contra Costa County Fire Protection District, Delta Diablo Sanitation District, and all other applicable local, state and federal agencies.
Public Facilities Element	
11-G-10: Encourage buffer landscaping and multi-use of utility sites and rights-of-way to harmonize with adjoining uses.	**Consistent.** The proposed project contains landscaping along the side and rear property lines.
Noise Element	
12-G-3: Continue efforts to incorporate noise considerations into land use planning decisions and guide the location and design of transportation facilities to minimize the effects of noise on adjacent land uses.	**No conflict.** The proposed project would produce little noise to effect adjacent land uses.

Attachment 5
Property Development Regulations Table
Best Care Fumigation, AP-19-1415 (DR)

Development Regulations: *CW (Waterfront Commercial) District*	**Required:**	**Proposed:**
Minimum lot area (ac.)	5,000 SF	8,555 SF
Minimum lot width (ft)	50 ft	123.5 ft
Max. Lot Coverage:	60%	9.6%
Minimum Yards:	-	-
Front:	-	5 ft.
Side:	5 ft.	5 ft.
Rear:	5 ft.	90 ft.
Maximum height of structures (ft):	55 ft	15 ft
Maximum FAR	1.0	0.09
Minimum site landscaping	10%	18%
Parking Required for Contractor:	1 space 1 per 500 sq. ft.	9 spaces

Attachment 6
Development Review Design Guidelines
Best Care Fumigation, AP-19-1415 (DR)

Design Review Guideline	Meets Guideline?
IV.a: Parking areas should be screened from view from any public right-of-way (beaming or hedge-type plant material). Parking areas should be broken up (landscape islands, projections, etc.) to eliminate vast areas of parking especially along street frontages.	**Yes.** The on-site parking is proposed to be screened by a chain link fence with slats, and additional landscaping along the side and rear property lines.
IV.b: Provisions should be made for permanent shopping cart corrals in retail shopping centers.	**Not applicable.** This guideline is intended to apply to retail shopping centers.
IV.c: Existing trees on site should be incorporated into the project side design, unless waived by the City Planner or Planning Commission.	**Yes.** Existing trees are to remain on site; and, additional trees will be planted.
IV.d: Developer should elect, at least, one of the schemes provided in Appendix #1 for screening all utility box transformers, backflow preventers, meters and junction boxes.	**Not applicable.** None on site.
IV.e: Projects with many buildings (greater than three) should have a variety of building sizes and masses.	**Not applicable.** There is only one structure proposed on site, in addition to the trash enclosure.
IV.f: Continuous horizontal roof lines should be broken up whenever possible. An expanse should not exceed 50 (fifty) feet in length unless architecture or size dictate a greater expanse.	**Yes.** The proposed structure does not have an expanse exceeding 50 feet.
IV.g: Building entries should be designed as a focal point. They should be designed to set the theme or be the primary feature of the building or commercial center.	**Yes.** The building doors will be painted an accent color to the building to create a focal point.

IV.h: Building elevations (example: rear of shopping centers) visible from public right-of-ways should be addressed in design review and treated appropriately.	**Not Applicable.** The proposed structure will be screened from view by a chain link fence with slats.
IV.i: A free-standing structure within an existing commercial or industrial center should be architecturally compatible with the center, including but not limited to materials, colors and architectural elements.	**Yes.** The proposed structure's industrial features are in keeping with the character of the area.
IV.j: All roof mounted equipment should be screened completely from view from all public right-of-ways. A site-line study may be necessary to determine appropriate screening method.	**Not applicable.** None on site.
IV.k: All Structures, including, but not limited to, "tilt-up" type structures, should have structural reliefs and articulated entries (Encourage the creation of shadow lines).	**Yes.** The building has articulated entries through trim surrounding the doors and windows.
IV.l: Exterior fire escapes, stairs and other appurtenances should be designed or treated as integral parts of the building façade.	**Conditionally.** A standard condition of approval requires all vents, gutters, downspouts, flashing electrical conduits, etc. be painted or finished to match the exterior to which they are attached.
IV.m: Downspouts should be designed into the façade of the building unless architecturally treated.	
IV.n: Add murals, lattice or some other spaceframe type treatment to blank walls visible from public view.	**Not Applicable.** No blank walls will be visible from public view.
IV.o: Prototype or "theme" architecture is discouraged.	**Not applicable.** No themed architecture is proposed.
IV.p: New or remodeled buildings should be designed to be compatible in design, color and materials with adjacent development.	**Yes.** The proposed structure's industrial features are in keeping with the character of the area, in design, color, and materials.

IV.q: The street-oriented elevations shall be designed so as not to present the appearance of a rear elevation (i.e., no loading doors or large blank walls, absence of architectural features found on other elevations, and limited landscaping as typically found on interior property lines).	**Yes.** The street-oriented elevation contains windows as an architectural feature; further the building will be screened from view by a chain link fence with slats.
IV.r: Trash enclosures should include area for collection of recyclables (example: space for two 90-gallon containers minimum, See Appendix #2 Trash Enclosure Design Standards).	**Yes.** The proposed project includes the construction of a trash enclosure on site, consistent with the City of Pittsburg Trash Enclosure Design Standards.
Green Building Design Guideline	**Meets Guideline?**
VI.D.1: Roofs should be designed to integrate renewable energy generation systems and provide a cool urban environment.	**Yes.** The building height will not cause obstructions in solar access for neighboring buildings.
VI.D.2: Parking lot impacts should be minimized.	**Yes.** The proposed project would include the planting of new trees within the landscaped area that would partially shade the parking area.
VI.D.3: Hardscapes should be constructed with permeable surfaces (e.g. pervious concrete, porous asphalt, unit pavers, and granular materials). Permeable paving consisting of porous above-ground materials, a 6- inch porous sub-base, and a base layer that is designed to ensure proper drainage away from the building and neighboring properties. Alternatively, impermeable surfaces may be used if they direct all runoff toward an appropriate permanent infiltration feature (e.g. vegetated swale, on-site rain garden, or rainwater cistern).	**Conditionally.** A proposed condition of approval requires the applicant to comply with all C3 regulations.

VI.D.4: Design choices should incorporate or prepare for electric vehicle charging or used vegetable oil fueling infrastructure.	**Not applicable.** The off-street parking requirement for a contractor use is 1 parking space per 500 square feet of gross floor area. The proposed building on site would be 600 square feet and would only require 1 parking space total.
VI.D.5: Fuel cell technology should be considered for application where (1) space or cost prohibits non-emitting on-site generation (such as solar, wind or geothermal), AND either (2) the heat resulting from fuel combustion is utilized for water or space heating, and/or (3) the fuel cells would be used primarily during peak utility hours.	**Not applicable.** This item is meant to apply to permanent buildings on a foundation, the proposed structure is a mobile office trailer, and therefore is not applicable.
VI.D.6: Reclaimed (purple pipeline) water should be used for as much non-potable water uses as feasible and practical. Landscaping water fixtures using reclaimed water should be purple, and purple and white signage should clearly mark areas that are irrigated with reclaimed water.	**Conditionally.** A proposed condition of approval requires the applicant use reclaimed water as much as is feasible and practical.
VI.D.7: Large commercial and institutional facilities that are anticipated to employ more than 50 employees, should consider providing on-site shops and services for those employees.	**Not applicable.** Less than 50 employees are expected.
VI.D.8: Street side building faces should encourage walking.	**Not applicable.** The project site is located in an industrial area where the public will have little access to walk.

VI.D.9: Secure bicycle parking facilities should be provided for at least 10% of expected peak hour trips. Bicycle parking structures should complementary to the surrounding structures and may be partially obscured by vegetation or painted with a mural design that is consistent with surrounding aesthetics. Shade trees should be planted if the parking facility is located in an area not shaded by surrounding structures. They should be located in an accessible and visible space to discourage misuse.	**Conditionally.** A proposed condition of approval requires the applicant to provide secure bicycle parking for 1 bicycle.

City of Pittsburg
Community Development Department – Planning Division
65 Civic Avenue, Pittsburg, CA 94565 | Tel: (925) 252-4920 | Fax: (925) 252-4814

NOTICE OF PUBLIC MEETING

NOTICE IS HEREBY GIVEN that the **PLANNING COMMISSION of the City of Pittsburg** will conduct a public meeting on:

DATE: **July 23, 2019**
TIME: **7:00 p.m.**
PLACE: **City Council Chamber at City Hall**
65 Civic Avenue, Pittsburg, California

Concerning the following matter:

Best Care Fumigation, AP-19-1415 (DR).

This is a request for design review approval of plans to place a 600 square foot mobile office trailer and construct a 224 square foot trash enclosure on an 8,555 square foot site located at 5 Industry Road, in the CW (Waterfront Commercial) District. Assessor's Parcel No. 073-042-012.

PROJECT PLANNER: Celina Palmer, (925) 252-4029 or cpalmer@ci.pittsburg.ca.us

---

Why am I receiving this notice? You are receiving this notice because you have either previously requested notifications from the Planning Division, or a project has been proposed in your neighborhood and all property owners within a minimum 300-foot radius of the project site are required to be notified under the Pittsburg Municipal Code.

Where can I get more information about this project?
The complete file for this project is available for public inspection at the Planning Division, weekdays during the hours of 8:00 AM to 12:00 PM and 1:00 PM to 5:00 PM. You can also find out more about the project by contacting the project planner listed above.

What can I do if I have comments on the project?
Comments or objections to the project can be made by writing or through oral testimony during the public meeting. Written comments citing the project name may be emailed to the project planner listed above, or may be mailed or delivered to: Pittsburg Planning Division, 65 Civic Avenue, Pittsburg, CA 94565. You may also register your comments or objections by attending the public meeting on the date and time listed above.

Pursuant to Section 65009 of the California Government Code, if you challenge this matter in court, you may be limited to those issues you or someone else raised at the public meeting described in this notice, or in written correspondence on the matter delivered to this agency at, or prior to the public meeting. Any written correspondence delivered to the Planning Division before the hearing body's action on the matter will become a part of the administrative record.

Project Title: Best Care Fumigation, AP-19-1415 (DR).
Location: APN: 073-042-012

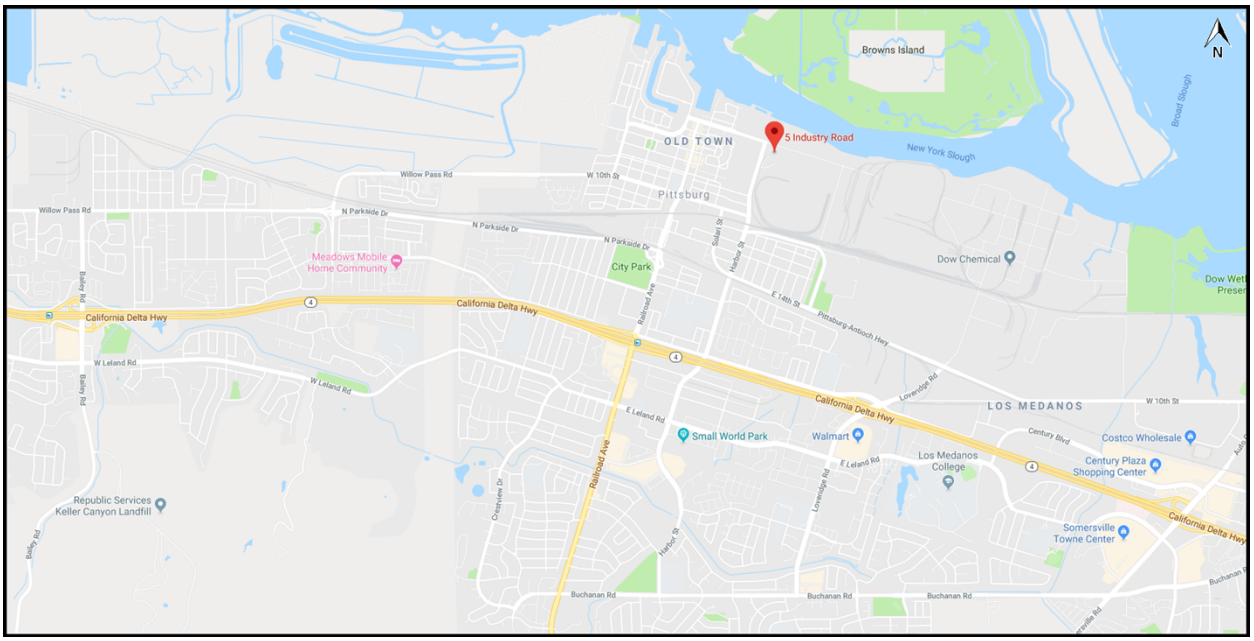

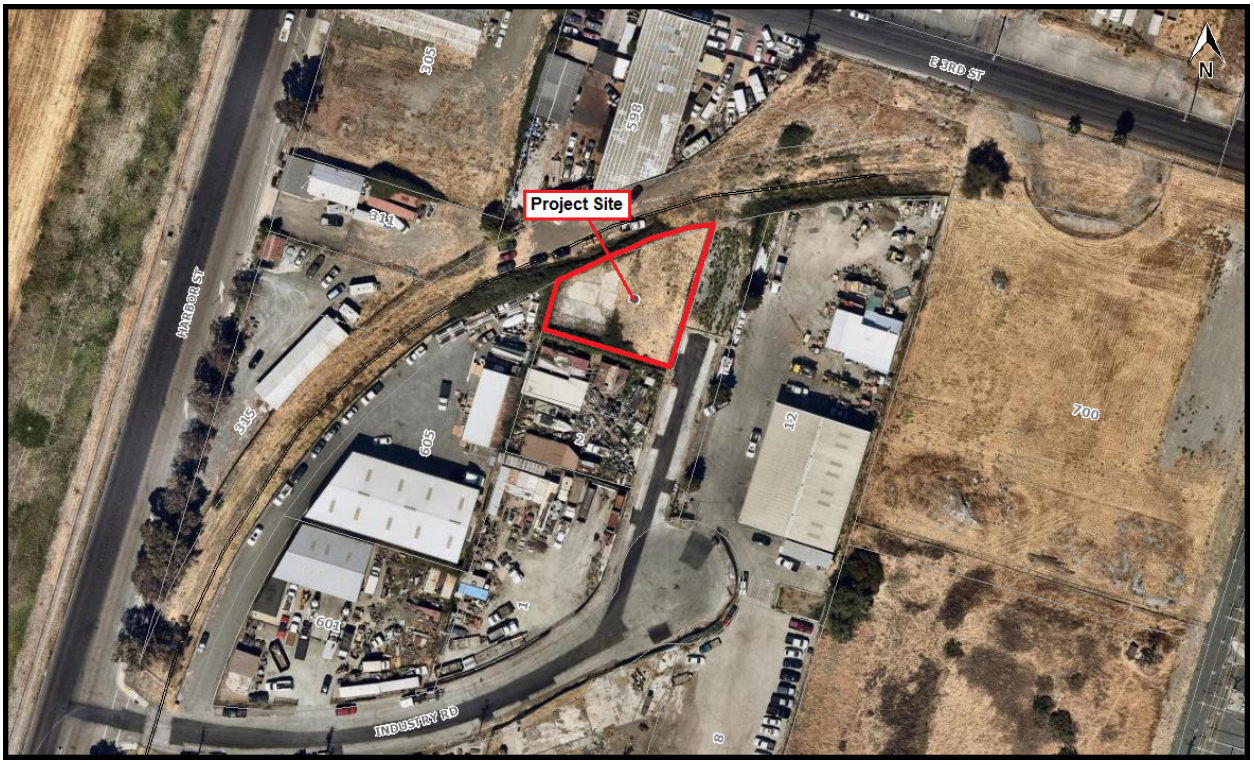

City of Pittsburg

Community Development Department - Planning Division
65 Civic Avenue
Pittsburg, CA 94565

NOTICE OF PUBLIC MEETING

CITY OF PITTSBURG
PLANNING COMMISSION
STAFF REPORT
July 23, 2019

ITEM: **Submittal of Adopted Zoning Administrator Resolutions.**

ORIGINATED BY: City of Pittsburg, Zoning Administrator, 65 Civic Avenue, Pittsburg, CA 94565

SUBJECT: The Zoning Administrator submits five resolutions previously approved under delegated authority, in accordance with Pittsburg Municipal Code sections 18.50.410 (home occupations) and 18.32.010 (fence height exceptions).

RECOMMENDATION:

Staff recommends that the Commission acknowledge receipt of the five attached adopted Zoning Administrator resolutions.

BACKGROUND:

Notices of intent to exercise delegated approval authority for the five applications referenced below were previously included on Planning Commission agendas of July 25, 2017, January 23, 2019, March 12, 2019, May 28, 2019, and June 25, 2019.

On July 11, 2019, a Zoning Administrator public hearing was held for each application and the Zoning Administrator subsequently approved each associated resolution listed below.

PROJECT DESCRIPTION:

Since the last Commission meeting the Zoning Administrator has adopted the following five resolutions approving delegated applications:

1. Resolution No. 338: 3878 Alta Vista Circle Fence Height Exception, AP-19-1408 (FHE)
2. Resolution No. 339: Acupuncture & Herbal Medicine, AP-19-1422 (ZA)
3. Resolution No. 340: Taqueria Los Gallos Fence Height Exception, AP-19-1430 (FHE)
4. Resolution No. 341: Pittsburg Seventh-Day Adventist Church Fence Height Exception, AP-19-1399 (FHE)
5. Resolution No. 342: Savage Services Fence Height Exception, AP-17-1244 (FHE)

GENERAL PLAN/CODE COMPLIANCE:

Zoning Administrator Public Hearings: PMC sections 18.50.410, 18.32.010 and 18.84.560 authorize the Zoning Administrator to hear and decide on applications for approval of certain home occupation permits, variances, exceptions to fence

regulations, large day care homes, small recycling facilities, and wireless telecommunications collocation facilities. PMC section 18.10.100 directs the Zoning Administrator to notify the Planning Commission of his or her intent to schedule and conduct a public hearing on any application for which the Zoning Administrator is authorized to act, prior to the Zoning Administrator acting on the application.

ANALYSIS:

Not applicable.

ACTION REQUIRED:

Acknowledge receipt of the attached Notices of Intent and the adopted Zoning Administrator resolutions.

ATTACHMENTS:

1. Zoning Administrator Resolution No. 338
2. Zoning Administrator Resolution No. 339
3. Zoning Administrator Resolution No. 340
4. Zoning Administrator Resolution No. 341
5. Zoning Administrator Resolution No. 342

Prepared by: Kristin Pollot, AICP, Zoning Administrator

701.03

ZA
RESO
338
7-11-19

KP

City of Pittsburg
Community Development Department – Planning Division
65 Civic Avenue, Pittsburg, CA 94565 | Tel: (925) 252-4920 | Fax: (925) 252-4814

Date: July 11, 2019

SUBJECT: ZA RESOLUTION NO. 338

Dear Applicant,

Enclosed is a copy of the resolution adopted by the Zoning Administrator. A copy of our Standard Conditions of Development is also included. Please read the enclosed documents and retain them for your files. All conditions of approval shall be incorporated into subsequent plan submittals and construction documents, where appropriate.

The enclosed resolution is valid for a limited period of time as specified in the resolution. Please make a note of the applicable expiration date and plan your construction timeline accordingly to avoid the loss of your entitlements.

If you have any questions about the enclosed resolution, please contact the Planning Division at the number listed above.

Sincerely,

Kristin Pollot, AICP
Planning Manager

Enclosures: (2) Resolution No. 338
Standard Conditions of Development

BEFORE THE ZONING ADMINISTRATOR OF THE CITY OF PITTSBURG

In the Matter of:

Resolution Approving a Fence Height Exception for an Existing Six to Seven-and-a-Half-Foot-Tall Fence, for "3878 Alta Vista Circle Fence Height Exception, AP-19-1408 (FHE)."	))))	Resolution No. 338

The Zoning Administrator DOES RESOLVE as follows:

Section 1. Background

A. On February 11, 2019, Damon Preston, filed Fence Height Exception Application No. 19-1408, requesting approval to legalize an existing six to seven-and-a-half-foot-tall wooden fence, built on a slope, located within the required corner side yard setback at 3878 Alta Vista Circle in the RS-6 (Single Family Residential, 6,000 Square Foot Minimum Lot Size) District. Assessor's Parcel No. 087-423-010.

B. On March 12, 2019, the Zoning Administrator submitted to the Planning Commission a Notice of Intent to exercise delegated authority for the subject application pursuant to Pittsburg Municipal Code (PMC) section 18.84.205(F)(2).

C. The fence height exception request is categorically exempt from the requirements of the California Environmental Quality Act (CEQA) under Class 3, "New Construction or Conversion of Small Structures" of the State CEQA Guidelines, section 15303.

D. On or prior to July 1, 2019, notice of the July 11, 2019 public hearing was posted at City Hall, near the subject site, and on the 'Public Notices' section of the city's website; was delivered for posting at the Pittsburg Library; and was mailed via first class or electronic mail to the applicant, to the property owner, to owners of property located within 300 feet of the project site, and to individuals who had previously filed written request for such notice, in accordance with Pittsburg Municipal Code (PMC) section 18.14.010 and Government Code section 65091.

E. PMC section 18.84.205(F), *Exceptions to Fence Height Regulations,* allows for the maximum allowable fence height to be increased through the issuance of a fence height exception approved by the Zoning Administrator. In order to approve a fence height exception, the Zoning Administrator must make findings (PMC section 18.84.205.F.2) that the proposed fence structures:

1. will not infringe upon the light, air circulation, or visual openness of surrounding properties;

2. will not detract, impair or destroy the characteristics of the established area;

and,

3. will not be detrimental to the health, safety or welfare of persons residing or working in or adjacent to the area or neighborhood of such structure.

F. On July 11, 2019, the Zoning Administrator held a public hearing on Fence Height Exception Application No. 19-1408, at which time oral and/or written testimony was considered.

Section 2. Findings

A. Based on all the information contained in the Planning Division files on this project, incorporated herein by reference and available for review in the Planning Division located at 65 Civic Avenue in Pittsburg, and based on all oral and written testimony presented at the public hearing, the Zoning Administrator finds that:

1. All recitals above are true and correct and are incorporated herein by reference.

2. The existing fence does not infringe upon the light, air circulation, or visual openness of the subject property or surrounding properties, in that it is located in the back half of the property where it is least visible.

3. The existing fence does not detract, impair or destroy the characteristics of the established area, in that it is constructed in a sound and workmanlike fashion using new materials, consistent with other fences in the neighborhood.

4. The existing fence is not detrimental to the health, safety, or welfare of persons residing or working in or adjacent to the area or neighborhood, in that the placement of the fence (approximately 40 feet back from the front property line) leaves clear sight lines for driver safety.

Section 3. Decision

A. Based on the findings set forth above, the Zoning Administrator hereby approves Fence Height Exception Application No. 19-1408, subject to the following conditions.

1. Site Plan. The existing fence shall remain substantially as presented in the approved site plan and photos date-stamped March 11, 2019 and July 2, 2019, except as may be modified by the conditions below.

2. Fence Maintenance. The fence shall be maintained erect and in a state of good repair. A dilapidated, dangerous, or unsightly fence or wall shall be repaired, replaced, or removed, as the situation may warrant.

3. Encroachment Permit. The applicant shall obtain approval and enter into a revocable encroachment agreement with the City of Pittsburg Engineering Division within 30 days of this approval.

4. Property Maintenance. The entire site including paved, unpaved, and landscaped areas must be kept in a neat and orderly manner, free of weeds loose trash, debris, and other litter.

Standard Conditions:

5. Construction. All site development shall comply with Title 15 (Building and Construction) of the Pittsburg Municipal Code.

6. Other Agency Requirements. The applicant shall comply with all requirements of the Pittsburg Building and Engineering Divisions, the Contra Costa County Fire Protection District, and all other applicable local, state and federal agencies. It is the responsibility of the business owner to contact each local, state, or federal agency for requirements that may pertain to this project.

7. Standard Conditions. The Standard Conditions of Development as adopted by the Pittsburg Planning Commission by Resolution No. 8931 shall apply as conditions of approval for this project as applicable. Where there is a conflict between this resolution and the Standard Conditions of Development, this Zoning Administrator resolution shall govern.

8. Indemnification. Applicant agrees to indemnify, defend, and hold harmless the City, its officials, officers, employees, agents and consultants from any and all administrative, legal or equitable actions or other proceedings instituted by any person challenging the validity of this project approval, subsequent project approval, or other action arising out of, or in connection with, this project approval. The parties shall cooperate in defending such action or proceeding. The parties shall use reasonable efforts to select mutually agreeable defense counsel but, if the parties cannot reach agreement, City may select its own legal counsel at applicant's sole cost and expense. Applicant may select its own legal counsel to represent applicant's interests at applicant's sole cost and expense. Applicant shall pay for City's costs of defense, whether directly or by timely reimbursement to City on a monthly basis. Such costs shall include, but not be limited to, all court costs and attorney's fees expended by City in defense of any such action or other proceeding, plus staff and City Attorney time spent responding to and defending the claim, action or proceeding.

9. Expiration. This approval will expire on July 11, 2020, unless an encroachment permit has been issued or a written request for extension is filed with the Planning Division prior to the expiration date and subsequently approved by the Zoning Administrator. The approval shall be valid for no more than six months from the date of permit issuance, unless work is commenced and diligently

pursued prior to the expiration of the permit.

Section 4. Effective Date

This resolution shall take effect immediately upon adoption of this resolution.

The foregoing resolution was passed and adopted the 11th day of July, 2019, by the Zoning Administrator of the City of Pittsburg, California.

KRISTIN POLLOT, AICP
ZONING ADMINISTRATOR

STANDARD CONDITIONS OF DEVELOPMENT
(Planning Commission Resolution No. 8931)

All projects approved by the Planning Commission must meet the following standard conditions unless specifically exempted by the Commission or Council.

A. Project Site.

1. The applicant shall comply with all regulations and code requirements of the Building Division, Engineering Division, Contra Costa Fire Protection District, the Police Department and any other agencies requiring review of the project. If required, these agencies shall be supplied copies of the final building and site plans.

2. Developer shall provide written notification to adjacent property owners for any drainage work required to collect or convey storm water runoff, which may or will affect their properties.

3. During construction water trucks or sprinkler systems are to be used in sufficient quantities to prevent dust from leaving the site during any earthmoving and/or construction activities. Nonpotable water shall be used from a source approved by the City Engineer. (Title 15 of PMC)

4. Continuous 6" high Portland Concrete Cement curbing shall be provided between all driveways and landscaped areas as indicated in the City of Pittsburg Standard Details. In addition to above, curbing between length of parking space and landscaped area shall include a 12" wide "Courtesy Curb."

5. CC&R's (Covenants, Conditions and Restrictions) for the project shall contain appropriate provisions for joint maintenance of any infrastructure, roadways, utilities, landscaping and irrigation as determined necessary by the City Engineer.

6. Developer shall submit a study addressing on and off-site storm water and sewer system capabilities. If the study indicates that the present system is inadequate, the developer must provide plans and install any additional storm water and sanitary and sanitary sewer facilities including off-site improvements to correct storm water runoff and sanitary sewer demands anticipated for upstream buildout in accordance with the Pittsburg General Plan.

7. Environmental and engineering studies, as directed by the Planning and Building Director, must be complete and on file prior to commencement to plan checking. Developer shall install off-street improvements determined necessary by the City Engineer to provide safe traffic conditions.

8. Developer shall underground existing and required on and off-site utilities as specified in Chapter 17 of the Municipal Code or as deemed necessary by the City Engineer.

9. All site development shall comply with title 12 (Streets, Sidewalks and Utilities), Title 13 (Water and Sewers) and Chapter 15.88 (Grading, Erosion and Sediment Control) of the Pittsburg Municipal Code as determined by the City Engineer. Issuance of a site development permit will be required whereby specific engineering requirements will be made as conditions of approval of that permit.

10. The CC&R's shall restrict the storage of recreational vehicles on this site or parcels unless they are the principle source of transportation for the

owner and prohibit parking on the public street for long than 72 hours.

11. All retaining wall adjacent to public right-of-ways shall be provided with decorative treatment, subject to approval by the Planning Division.

12. The design of any masonry soundwall shall be approved by the Planning and Building Department. It shall match or harmonize with existing soundwalls of neighboring projects along that street.

B. Architecture.

1. All mechanical, irrigation, ground and/or roof mounted equipment shall be architecturally screened from view from all public right-of-ways prior to issuance of certificate of occupancy.

2. All trash enclosures shall be constructed of masonry material with self-enclosing doors and have a second access. The enclosure shall have materials and colors consistent with the primary building.

3. All vents, gutters, downspouts, flashing electrical conduits, etc., shall be painted or finished to match the color of the adjacent surface unless otherwise directed by the Planning Commission.

4. Soffits and other architectural elements visible from view but not detailed on the plans shall be finished in a material in harmony with the exterior of the building.

5. Finish quality of exterior design elements including, but not limited to, building façades and landscaping shall be subject to approval of the Planning Division prior to issuance of Certificate of Occupancy.

C. Landscaping.

1. Specific landscaping for screening shall have an appearance of mature growth subject to a field check and approval by the Planning Division prior to Certificate of Occupancy.

2. The area under the drip line of all existing trees, which are to be saved, shall be fenced during construction. Grading shall be restricted under them to prevent soil compaction around the trees and to protect them from damage.

3. An existing tree inventory shall be created and included on the site plan for all new projects prior to approval of grading plan.

4. All slope banks in excess of five (5) feet in vertical height and 2:1 or greater slope shall be landscaped and irrigated for erosion control and to soften their appearance as follows: one 15-gallon or larger size tree per each 150 sq. ft. of slope area, one 1-gallon or larger size shrub per each 100 sq. ft. of slope area, and appropriate ground cover 12-24 inches on-center. In addition, slope banks in excess of eight (8) feet in vertical eight and 2:1 or greater slope also include one 5-gallon or larger size tree per each 250 sq. ft. of slope area. Trees and shrubs shall be planted in staggered clusters to soften and vary slope plane. Slope planting required by this condition shall include a permanent irrigation system to be installed by the developer prior to occupancy.

5. All planting shall be maintained in good growing condition. Such maintenance shall include, where appropriate, pruning, mowing, weeding, cleaning of debris and trash, fertilizing and regular watering. Whenever necessary, planting shall be replaced with other plant materials to insure continued compliance with applicable landscaping requirements. Required

irrigation systems shall be fully maintained in sound operating condition with heads periodically cleaned and replaced when missing to insure continued regular watering of landscape areas, and health and vitality of landscape materials.

D. General Requirements

1. Final inspection for occupancy permits will not be granted until all construction and landscaping is complete in accordance with approved plans.

2. The applicant shall defend, indemnify and hold harmless the City of Pittsburg, its agents, officers, and employees from any claim, action, or proceeding against the City or its agents, officers, or employees to attack, set aside, void or annul this approval, or any aspect of the City's consideration of applicant's project. The applicant recognizes and agrees that applicant's voluntary commitment to meet the obligations described in this condition is an integral factor in the City's approval of this project. The intent of this condition is to require the applicant to bear the cost of any and all litigation instituted to overturn or in any way modify the City's approval of this project. Such costs include without limitation, any award of attorney's fees and costs to a prevailing plaintiff or petitioner. In the event the city becomes aware of any such claim, action, or proceeding, the City shall promptly notify the applicant and shall cooperate fully in the defense. If the City fails to promptly notify the applicant, or if the City fails to cooperate fully in the defense, the applicant shall not thereafter be responsible to defend, indemnify, or hold harmless the City. Nothing contained in this condition prohibits the City from participating in the defense of any claim, action, or proceeding, it both the following occur: (a) the City bears its own attorneys' fees and costs; and (b) the City defends the action in good faith. The applicant shall not be required to pay or perform any settlement unless the applicant approves the settlement.

3. It is required by State Law (Business and Professional Code Section No. 5537 & 5538 and Section 302(b) of the Uniform Building Code) that all commercial buildings, new or existing must have a licensed professional designer (Architect, Civil or Structural Engineer) to design all changes of use or occupancy as well as new construction.

4. The applicant shall submit a complete area water pressure availability study for all phases of the Project prior to issuance of any development permits. If the study indicates that the present system is inadequate, the Applicant must provide plans, which will demonstrate any remedial action necessary to abate the deficiency and shall take all necessary actions at the applicant's expense.

5. This use permit may be recalled to the Planning Commission for review at any time due to complaints regarding lack of compliance with conditions of approval, traffic congestion, noise generation, or other adverse operating characteristics. At such time, the Commission may revoke the use permit or add/modify conditions approval.

6. It is the responsibility of the applicant or developer to check with each agency for requirements that may pertain to their project.

7. All signs shall be submitted to the Planning Division for design review per Title 19 of the Pittsburg Municipal Code.

8. All landscape areas shall be maintained in a healthy, thriving and weed free condition.

9. The site shall be maintained in a neat and clean manner free of trash and debris.

10. All outdoor mechanical equipment, satellite dishes, fire main and all rooftop equipment shall be fully visually screened upon installation subject to the approval of the Planning Division. Screening devices shall be shown on construction and/or landscape plans.

11. All exterior light fixtures shall be shown on plans subject to staff review and approval. All lights attached to buildings shall provide a soft "wash" of light against the wall. All building and parking or yard lights shall conform to City Parking Standards 18.78.050 (F) and Performance Standards 18.82.030 (B) and shall compliment the site and building architecture.

12. Prior to occupancy, the developer shall supply the City with an ACAD computer disk file showing plans that reflect the project as it was build (As-Builts) at the discretion of the Planning and Building Director.

E. Standard Conditions of Approval Requiring Minimum Construction Site Management Practices

1. (Projects involving land disturbances of less than five (5) acres) – During construction activities, the project sponsor shall reduce or prevent to the maximum extent practicable the direct or indirect discharge of any pollutant into the storm drain system utilizing best management practices contained in the California Storm Water Best Management Practices Handbook for Construction Activities. Construction activities include, but are not limited to: watering operations; roadwork and paving operations; concrete and painting; structure construction and painting; construction material storage and handling; construction waste/debris storage and disposal; and, construction equipment/vehicle cleaning, maintenance and fueling operations. The project sponsor is also responsible for training all contractors and subcontractors on the best management practices which are identified in the California Storm Water Best Management Practices Handbook for Construction Activities which will be available at the pre-construct meeting of the project.

or

2. (Projects involving land disturbances of five (5) acres or more) – Prior to commencement of any site work that will result in a land disturbance of five acres or more, the project sponsor shall submit to the City a copy of the Notice of Intent (NOI) sent the State Water Resources Control Board and the Stormwater Pollution Prevention Plan (SWPPP) prepared for the project, as required by the State's General Construction Activity Permit.

3. All storm drains, which serve the site, shall be protected from spills and soil runoff (from unpaved parking areas). The applicant may use "Any Source Control" BMP (Best Management Practice) as listed in the California Storm Water Best Management Practice Handbook for storm water run-ff for commercial and industrial sites. Storm drains will be inspected periodically. Questions may be referred to City NPDES Coordinator, at 252-4920.

City of Pittsburg
Community Development Department – Planning Division
65 Civic Avenue, Pittsburg, CA 94565 | Tel: (925) 252-4920 | Fax: (925) 252-4814

Date: 7/11/19

SUBJECT: ZA RESOLUTION NO. 339

Dear Applicant,

Enclosed is a copy of the resolution adopted by the Zoning Administrator. A copy of our Standard Conditions of Development is also included. Please read the enclosed documents and retain them for your files. All conditions of approval shall be incorporated into subsequent plan submittals and construction documents, where appropriate.

The enclosed resolution is valid for a limited period of time as specified in the resolution. Please make a note of the applicable expiration date and plan your construction timeline accordingly to avoid the loss of your entitlements.

If you have any questions about the enclosed resolution, please contact the Planning Division at the number listed above.

Sincerely,

Kristin Pollot, AICP
Planning Manager

Enclosures: (2) Resolution No. 339
Standard Conditions of Development

BEFORE THE ZONING ADMINISTRATOR OF THE CITY OF PITTSBURG

In the Matter of:

Resolution Granting Zoning Administrator Approval to Operate a Medical Services Office as a Home Occupation at 53 Alvarado Avenue for "Acupuncture & Herbal Medicine, AP-19-1422 (ZA)."	)	Resolution No. 339

The Zoning Administrator DOES RESOLVE as follows:

Section 1. Background

A. On May 1, 2019, Joanne Fanucchi filed Home Occupation Permit Application No. 19-1422, requesting approval to establish a medical services office (acupuncture and herbal medicine) within an existing single-family residence located at 53 Alvarado Avenue, in the RS-5 (Residential Single Family, 5,000 Square-Foot Minimum Lot Size) District. Assessor's Parcel No. 087-063-026.

B. On May 28, 2019, a Notice of Intent to exercise staff delegated authority for this project was included on the Planning Commission agenda.

C. The proposed home occupation is categorically exempt from the requirements of the California Environmental Quality Act (CEQA) under Class 1, "Existing Facilities" of the State CEQA Guidelines, section 15301.

D. On or prior to July 1, 2019, notice of the July 11, 2019 public hearing was posted at City Hall, at the proposed project site, and on the "Public Notices" section of the City's website; was delivered to the Pittsburg Library; and mailed via first class or electronic mail to the property owner, the applicant, to all owners of property within 300 feet of the project site, and to all interested parties and individuals and organizations that requested such notice, in accordance with PMC section 18.32.010 and Government Code section 65091.

E. Pittsburg Municipal Code (PMC) section 18.32.010, states that Zoning Administrator approval is required before the issuance of a Home Occupation Permit, to ensure that each new or expanded use complies with PMC Title 18.

F. PMC section 18.50.410, specifies required findings for Zoning Administrator approval of a home occupation that does not comply with every condition listed in PMC section 18.50.405. In accordance with PMC section 18.50.410(A), the Zoning Administrator must find that:

1. The establishment, maintenance or conduct of the home occupation, or the conditions under which the use will be conducted in this particular

case, will not be detrimental to the health, safety, morals, comfort, convenience or welfare of persons residing or working in, or adjacent to, the neighborhood of such use, and will not, in this particular case, be detrimental to the public welfare or injurious to property in such neighborhood;

2. The home occupation, in this case, will not be objectionable or undesirable because of potential noise, increased pedestrian or vehicular traffic, dust, smoke, odors, or any other condition which may interfere with the general welfare of the surrounding residential area; and

3. The establishment, maintenance, and conduct of the use generally complies with the intent of a home occupation as defined in this title.

G. On July 11, 2019, the Zoning Administrator held a public hearing on Planning Application No. 19-1422, at which time oral and/or written testimony was considered.

Section 2. Findings

A. Based on the Zoning Administrator Staff Report entitled, "Acupuncture & Herbal Medicine, AP-19-1422 (ZA)," dated July 11, 2019, and based on all the information contained in the Planning Division files on the project, incorporated herein by reference and available for review in the Planning Division located at 65 Civic Avenue in Pittsburg, and based on all written and oral testimony presented at the meeting, the Zoning Administrator finds that:

1. All recitals above are true and correct and are incorporated herein by reference.

2. The proposed project will not be detrimental to the health, safety, morals, comfort, convenience or welfare of persons residing or working in, or adjacent to, the neighborhood of such use, and will not, in this particular case, be detrimental to the public welfare or injurious to property in such neighborhood, in that the proposed acupuncture and herbal medicine use will expand community access to a licensed acupuncturist providing medical services, and would not cause excessive pedestrian or vehicular traffic in the area.

3. The home occupation will not be objectionable or undesirable because of potential noise, increased pedestrian or vehicular traffic, dust, smoke, odors, or any other condition which may interfere with the general welfare of the surrounding residential area, if conditions are added that: 1) allow only one client on site at a time; 2) require a 15-minute interval between appointment times to allow for clients to leave prior to the next client arriving; 3) require that one parking space within the driveway be designated for clients; and 4) that clients arriving early be prohibited from waiting outside of the home.

4. The establishment, maintenance, and conduct of the use will generally comply with the intent of a home occupation as defined within PMC Title 18, in that there would be no external evidence of its operation and it would conform to a majority of the standards for home occupations, as set forth by PMC section 18.50.405.

B. The staff report entitled, "Acupuncture & Herbal Medicine, AP-19-1422 (ZA)," dated July 11, 2019, is referenced hereto as additional support for findings.

Section 3. Decision

Based on the findings set forth above, the Zoning Administrator hereby approves Planning Application No. 19-1422, subject to the following conditions:

1. The home occupation shall be operated substantially as presented to the Zoning Administrator in the staff report identified in Section 2 above, except as modified by the conditions below. Operation of the approved business in a manner inconsistent with this description and this zoning administrator approval shall be grounds for revocation of the zoning administrator approval.

2. Hours of operation shall be limited to 10:00 a.m. to 4:00 p.m., Monday through Friday.

3. No structure, addition, alteration or remodeling of the dwelling is permitted in connection with the home occupation, aside from alterations related to the conversion of the third bedroom into a medical office with a half bathroom. The applicant shall obtain building permits from the City of Pittsburg prior to construction of the proposed alterations.

4. No sign, nameplate, or any other form of advertising used in connection with the home occupation may be displayed on the site.

5. Only one client in connection with the home-based business shall be permitted on site at any given time.

6. The applicant shall designate an off-street parking space within the existing driveway for client parking. The applicant shall prepare a parking information handout for clients identifying this space.

7. The applicant shall schedule a minimum interval of 15-minutes between client appointments to allow for one client to leave the site prior to another client's arrival.

8. The operator of the home occupation shall maintain an active license through the State of California Acupuncture Board.

9. The applicant shall obtain a valid permit from Contra Costa Environmental Health Department.

10. If any changes in the medical services office (acupuncture and herbal medicine) use, or additional activities beyond that proposed are desired, prior City review and approval as required under PMC Title 18 shall be required. Requests for modification of the home occupation permit shall be submitted to the Zoning Administrator. Requested changes may require a modification of the home occupation permit or, upon determination of the Zoning Administrator, a new home occupation permit may be required. Minor changes may be approved by the Zoning Administrator, provided that the Zoning Administrator determines the changes to be in substantial conformance with this home occupation permit or a subsequent home occupation permit, as applicable.

11. The Standard Conditions of Development as adopted by the Pittsburg Planning Commission by Resolution No. 8931 shall apply as conditions of approval for this project as applicable. Where there is a conflict between the Conditions in Resolution No. 8931 and the conditions stated herein, the conditions in this Resolution No. 339 shall apply.

12. It shall be the responsibility of the applicant to maintain an updated business license containing an accurate description of the use at the site.

13. Applicant agrees to indemnify, defend, and hold harmless the City, its officials, officers, employees, agents and consultants from any and all administrative, legal or equitable actions or other proceedings instituted by any person challenging the validity of the project approval, subsequent project approval, or other action arising out of, or in connection with, or the project approvals. The parties shall cooperate in defending such action or proceeding. The parties shall use reasonable efforts to select mutually agreeable defense counsel but, if the parties cannot reach agreement, City may select its own legal counsel at applicant's sole cost and expense. Applicant may select its own legal counsel to represent applicant's interests at applicant's sole cost and expense. Applicant shall pay for City's costs of defense, whether directly or by timely reimbursement to City on a monthly basis. Such costs shall include, but not be limited to, all court costs and attorneys' fees expended by City in defense of any such action or other proceeding, plus staff and City Attorney time spent responding to and defending the claim, action or proceeding.

14. This approval shall expire on July 11, 2021, unless the use has been legally established, and all applicable conditions of approval complied with prior to the expiration date, or a written request for an extension is filed with the

Planning Department prior to the expiration date and is subsequently approved by the Zoning Administrator.

Section 4. Effective Date

This resolution shall take effect immediately upon its adoption.

The foregoing resolution was passed and adopted the 11th day of July, 2019, by the Zoning Administrator of the City of Pittsburg, California.

KRISTIN POLLOT, AICP
ZONING ADMINISTRATOR

STANDARD CONDITIONS OF DEVELOPMENT

(Planning Commission Resolution No. 8931)

All projects approved by the Planning Commission must meet the following standard conditions unless specifically exempted by the Commission or Council.

A. Project Site.

1. The applicant shall comply with all regulations and code requirements of the Building Division, Engineering Division, Contra Costa Fire Protection District, the Police Department and any other agencies requiring review of the project. If required, these agencies shall be supplied copies of the final building and site plans.

2. Developer shall provide written notification to adjacent property owners for any drainage work required to collect or convey storm water runoff, which may or will affect their properties.

3. During construction water trucks or sprinkler systems are to be used in sufficient quantities to prevent dust from leaving the site during any earthmoving and/or construction activities. Nonpotable water shall be used from a source approved by the City Engineer. (Title 15 of PMC)

4. Continuous 6" high Portland Concrete Cement curbing shall be provided between all driveways and landscaped areas as indicated in the City of Pittsburg Standard Details. In addition to above, curbing between length of parking space and landscaped area shall include a 12" wide "Courtesy Curb."

5. CC&R's (Covenants, Conditions and Restrictions) for the project shall contain appropriate provisions for joint maintenance of any infrastructure, roadways, utilities, landscaping and irrigation as determined necessary by the City Engineer.

6. Developer shall submit a study addressing on and off-site storm water and sewer system capabilities. If the study indicates that the present system is inadequate, the developer must provide plans and install any additional storm water and sanitary and sanitary sewer facilities including off-site improvements to correct storm water runoff and sanitary sewer demands anticipated for upstream buildout in accordance with the Pittsburg General Plan.

7. Environmental and engineering studies, as directed by the Planning and Building Director, must be complete and on file prior to commencement to plan checking. Developer shall install off-street improvements determined necessary by the City Engineer to provide safe traffic conditions.

8. Developer shall underground existing and required on and off-site utilities as specified in Chapter 17 of the Municipal Code or as deemed necessary by the City Engineer.

9. All site development shall comply with title 12 (Streets, Sidewalks and Utilities), Title 13 (Water and Sewers) and Chapter 15.88 (Grading, Erosion and Sediment Control) of the Pittsburg Municipal Code as determined by the City Engineer. Issuance of a site development permit will be required whereby specific engineering requirements will be made as conditions of approval of that permit.

10. The CC&R's shall restrict the storage of recreational vehicles on this site or parcels unless they are the principle source of transportation for the

owner and prohibit parking on the public street for long than 72 hours.

11. All retaining wall adjacent to public right-of-ways shall be provided with decorative treatment, subject to approval by the Planning Division.

12. The design of any masonry soundwall shall be approved by the Planning and Building Department. It shall match or harmonize with existing soundwalls of neighboring projects along that street.

B. Architecture.

1. All mechanical, irrigation, ground and/or roof mounted equipment shall be architecturally screened from view from all public right-of-ways prior to issuance of certificate of occupancy.

2. All trash enclosures shall be constructed of masonry material with self-enclosing doors and have a second access. The enclosure shall have materials and colors consistent with the primary building.

3. All vents, gutters, downspouts, flashing electrical conduits, etc., shall be painted or finished to match the color of the adjacent surface unless otherwise directed by the Planning Commission.

4. Soffits and other architectural elements visible from view but not detailed on the plans shall be finished in a material in harmony with the exterior of the building.

5. Finish quality of exterior design elements including, but not limited to, building façades and landscaping shall be subject to approval of the Planning Division prior to issuance of Certificate of Occupancy.

C. Landscaping.

1. Specific landscaping for screening shall have an appearance of mature growth subject to a field check and approval by the Planning Division prior to Certificate of Occupancy.

2. The area under the drip line of all existing trees, which are to be saved, shall be fenced during construction. Grading shall be restricted under them to prevent soil compaction around the trees and to protect them from damage.

3. An existing tree inventory shall be created and included on the site plan for all new projects prior to approval of grading plan.

4. All slope banks in excess of five (5) feet in vertical height and 2:1 or greater slope shall be landscaped and irrigated for erosion control and to soften their appearance as follows: one 15-gallon or larger size tree per each 150 sq. ft. of slope area, one 1-gallon or larger size shrub per each 100 sq. ft. of slope area, and appropriate ground cover 12-24 inches on-center. In addition, slope banks in excess of eight (8) feet in vertical eight and 2:1 or greater slope also include one 5-gallon or larger size tree per each 250 sq. ft. of slope area. Trees and shrubs shall be planted in staggered clusters to soften and vary slope plane. Slope planting required by this condition shall include a permanent irrigation system to be installed by the developer prior to occupancy.

5. All planting shall be maintained in good growing condition. Such maintenance shall include, where appropriate, pruning, mowing, weeding, cleaning of debris and trash, fertilizing and regular watering. Whenever necessary, planting shall be replaced with other plant materials to insure continued compliance with applicable landscaping requirements. Required

irrigation systems shall be fully maintained in sound operating condition with heads periodically cleaned and replaced when missing to insure continued regular watering of landscape areas, and health and vitality of landscape materials.

D. General Requirements

1. Final inspection for occupancy permits will not be granted until all construction and landscaping is complete in accordance with approved plans.

2. The applicant shall defend, indemnify and hold harmless the City of Pittsburg, its agents, officers, and employees from any claim, action, or proceeding against the City or its agents, officers, or employees to attack, set aside, void or annul this approval, or any aspect of the City's consideration of applicant's project. The applicant recognizes and agrees that applicant's voluntary commitment to meet the obligations described in this condition is an integral factor in the City's approval of this project. The intent of this condition is to require the applicant to bear the cost of any and all litigation instituted to overturn or in any way modify the City's approval of this project. Such costs include without limitation, any award of attorney's fees and costs to a prevailing plaintiff or petitioner. In the event the city becomes aware of any such claim, action, or proceeding, the City shall promptly notify the applicant and shall cooperate fully in the defense. If the City fails to promptly notify the applicant, or if the City fails to cooperate fully in the defense, the applicant shall not thereafter be responsible to defend, indemnify, or hold harmless the City. Nothing contained in this condition prohibits the City from participating in the defense of any claim, action, or proceeding, it both the following occur: (a) the City bears its own attorneys' fees and costs; and (b) the City defends the action in good faith. The applicant shall not be required to pay or perform any settlement unless the applicant approves the settlement.

3. It is required by State Law (Business and Professional Code Section No. 5537 & 5538 and Section 302(b) of the Uniform Building Code) that all commercial buildings, new or existing must have a licensed professional designer (Architect, Civil or Structural Engineer) to design all changes of use or occupancy as well as new construction.

4. The applicant shall submit a complete area water pressure availability study for all phases of the Project prior to issuance of any development permits. If the study indicates that the present system is inadequate, the Applicant must provide plans, which will demonstrate any remedial action necessary to abate the deficiency and shall take all necessary actions at the applicant's expense.

5. This use permit may be recalled to the Planning Commission for review at any time due to complaints regarding lack of compliance with conditions of approval, traffic congestion, noise generation, or other adverse operating characteristics. At such time, the Commission may revoke the use permit or add/modify conditions approval.

6. It is the responsibility of the applicant or developer to check with each agency for requirements that may pertain to their project.

7. All signs shall be submitted to the Planning Division for design review per Title 19 of the Pittsburg Municipal Code.

8. All landscape areas shall be maintained in a healthy, thriving and weed free condition.

9. The site shall be maintained in a neat and clean manner free of trash and debris.

10. All outdoor mechanical equipment, satellite dishes, fire main and all rooftop equipment shall be fully visually screened upon installation subject to the approval of the Planning Division. Screening devices shall be shown on construction and/or landscape plans.

11. All exterior light fixtures shall be shown on plans subject to staff review and approval. All lights attached to buildings shall provide a soft "wash" of light against the wall. All building and parking or yard lights shall conform to City Parking Standards 18.78.050 (F) and Performance Standards 18.82.030 (B) and shall compliment the site and building architecture.

12. Prior to occupancy, the developer shall supply the City with an ACAD computer disk file showing plans that reflect the project as it was build (As-Builts) at the discretion of the Planning and Building Director.

E. Standard Conditions of Approval Requiring Minimum Construction Site Management Practices

1. (Projects involving land disturbances of less than five (5) acres) – During construction activities, the project sponsor shall reduce or prevent to the maximum extent practicable the direct or indirect discharge of any pollutant into the storm drain system utilizing best management practices contained in the California Storm Water Best Management Practices Handbook for Construction Activities. Construction activities include, but are not limited to: watering operations; roadwork and paving operations; concrete and painting; structure construction and painting; construction material storage and handling; construction waste/debris storage and disposal; and, construction equipment/vehicle cleaning, maintenance and fueling operations. The project sponsor is also responsible for training all contractors and subcontractors on the best management practices which are identified in the California Storm Water Best Management Practices Handbook for Construction Activities which will be available at the pre-construct meeting of the project.

or

2. (Projects involving land disturbances of five (5) acres or more) – Prior to commencement of any site work that will result in a land disturbance of five acres or more, the project sponsor shall submit to the City a copy of the Notice of Intent (NOI) sent the State Water Resources Control Board and the Stormwater Pollution Prevention Plan (SWPPP) prepared for the project, as required by the State's General Construction Activity Permit.

3. All storm drains, which serve the site, shall be protected from spills and soil runoff (from unpaved parking areas). The applicant may use "Any Source Control" BMP (Best Management Practice) as listed in the California Storm Water Best Management Practice Handbook for storm water run-ff for commercial and industrial sites. Storm drains will be inspected periodically. Questions may be referred to City NPDES Coordinator, at 252-4920.

701.03

ZA
RESO
340
7-11-19

City of Pittsburg
Community Development Department – Planning Division
65 Civic Avenue, Pittsburg, CA 94565 | Tel: (925) 252-4920 | Fax: (925) 252-4814

Date: 7/11/19

SUBJECT: ZA RESOLUTION NO. 340

Dear Applicant,

Enclosed is a copy of the resolution adopted by the Zoning Administrator. A copy of our Standard Conditions of Development is also included. Please read the enclosed documents and retain them for your files. All conditions of approval shall be incorporated into subsequent plan submittals and construction documents, where appropriate.

The enclosed resolution is valid for a limited period of time as specified in the resolution. Please make a note of the applicable expiration date and plan your construction timeline accordingly to avoid the loss of your entitlements.

If you have any questions about the enclosed resolution, please contact the Planning Division at the number listed above.

Sincerely,

Kristin Pollot, AICP
Planning Manager

Enclosures: (2) Resolution No. 340
Standard Conditions of Development

BEFORE THE ZONING ADMINISTRATOR OF THE CITY OF PITTSBURG

In the Matter of:

Resolution Approving a Fence Height Exception for a Six-Foot-Tall Fence, for "Taqueria Los Gallos Fence Height Exception, AP-19-1430 (ZA)."	))))	Resolution No. 340

The Zoning Administrator DOES RESOLVE as follows:

Section 1. Background

A. On June 7, 2019, Jorge Cardenas, filed Fence Height Exception Application No. 19-1430, requesting approval to construct a six-foot-tall wrought-iron fence located within the required front yard setback at 266 Diane Avenue in the RS-5 (Single Family Residential, 5,000 Square Foot Minimum Lot Size) District. Assessor's Parcel Nos. 073-181-011 and 073-181-012.

B. On June 25, 2019, the Zoning Administrator submitted to the Planning Commission a Notice of Intent to exercise delegated authority for the subject application pursuant to Pittsburg Municipal Code (PMC) section 18.84.205(F)(2).

C. The fence height exception request is categorically exempt from the requirements of the California Environmental Quality Act (CEQA) under Class 3, "New Construction or Conversion of Small Structures" of the State CEQA Guidelines, section 15303.

D. On or prior to July 1, 2019, notice of the July 11, 2019 public hearing was posted at City Hall, near the subject site, and on the 'Public Notices' section of the city's website; was delivered for posting at the Pittsburg Library; and was mailed via first class or electronic mail to the applicant, to the property owner, to owners of property located within 300 feet of the project site, and to individuals who had previously filed written request for such notice, in accordance with Pittsburg Municipal Code (PMC) section 18.14.010 and Government Code section 65091.

E. PMC section 18.84.205(F), *Exceptions to Fence Height Regulations,* allows for the maximum allowable fence height to be increased through the issuance of a fence height exception approved by the Zoning Administrator. In order to approve a fence height exception, the Zoning Administrator must make findings (PMC section 18.84.205.F.2) that the proposed fence structures:

1. will not infringe upon the light, air circulation, or visual openness of surrounding properties;

2. will not detract, impair or destroy the characteristics of the established area;

and,

3. will not be detrimental to the health, safety or welfare of persons residing or working in or adjacent to the area or neighborhood of such structure.

F. On July 11, 2019, the Zoning Administrator held a public hearing on Fence Height Exception Application No. 19-1430, at which time oral and/or written testimony was considered.

Section 2. Findings

A. Based on all the information contained in the Planning Division files on this project, incorporated herein by reference and available for review in the Planning Division located at 65 Civic Avenue in Pittsburg, and based on all oral and written testimony presented at the public hearing, the Zoning Administrator finds that:

1. All recitals above are true and correct and are incorporated herein by reference.

2. The proposed fence, as designed, will not infringe upon the light, air circulation, or visual openness of the subject property or surrounding properties, in that it is located at the front of the property, not adjacent to any existing buildings, and that the picket fence design would allow for visibility and the permeability of light and air between posts.

3. The proposed fence, as designed, will not detract, impair or destroy the characteristics of the established area, in that the proposed fence will be constructed in a sound and workmanlike fashion using new materials, consistent with other fences in the neighborhood.

4. The proposed fence will not be detrimental to the health, safety, or welfare of persons residing or working in or adjacent to the area or neighborhood, if the fence is conditioned to be placed at least five feet back from the front property line to provide sufficient driveway visibility.

Section 3. Decision

A. Based on the findings set forth above, the Zoning Administrator hereby approves Fence Height Exception Application No. 19-1430, subject to the following conditions.

1. Site Plan. The proposed fence shall be developed substantially as presented in the site plan date-stamped May 23, 2019, except as may be modified by the conditions below.

2. Fencing Material. Fencing within the front yard setback shall be of wrought iron

or similar materials, in a picket fence design to allow for light and air circulation and visual openness.

3. Driveway Visibility. The fence shall be located at least five feet from the street property line to allow for sufficient visibility at the driveway entrance.

4. Fence Maintenance. The fence shall be maintained erect and in a state of good repair. A dilapidated, dangerous, or unsightly fence or wall must be repaired, replaced, or removed, as the situation may warrant.

5. Property Maintenance. The entire site including paved, unpaved, and landscaped areas must be kept in a neat and orderly manner, free of weeds loose trash, debris, and other litter.

Standard Conditions:

6. Construction. All site development shall comply with Title 15 (Building and Construction) of the Pittsburg Municipal Code.

7. Other Agency Requirements. The applicant shall comply with all requirements of the Pittsburg Building and Engineering Divisions, the Contra Costa County Fire Protection District, and all other applicable local, state and federal agencies. It is the responsibility of the business owner to contact each local, state, or federal agency for requirements that may pertain to this project.

8. Standard Conditions. The Standard Conditions of Development as adopted by the Pittsburg Planning Commission by Resolution No. 8931 shall apply as conditions of approval for this project as applicable. Where there is a conflict between this resolution and the Standard Conditions of Development, this Zoning Administrator resolution shall govern.

9. Indemnification. Applicant agrees to indemnify, defend, and hold harmless the City, its officials, officers, employees, agents and consultants from any and all administrative, legal or equitable actions or other proceedings instituted by any person challenging the validity of this project approval, subsequent project approval, or other action arising out of, or in connection with, this project approval. The parties shall cooperate in defending such action or proceeding. The parties shall use reasonable efforts to select mutually agreeable defense counsel but, if the parties cannot reach agreement, City may select its own legal counsel at applicant's sole cost and expense. Applicant may select its own legal counsel to represent applicant's interests at applicant's sole cost and expense. Applicant shall pay for City's costs of defense, whether directly or by timely reimbursement to City on a monthly basis. Such costs shall include, but not be limited to, all court costs and attorney's fees expended by City in defense of any such action or other proceeding, plus staff and City Attorney time spent responding to and defending the claim, action or proceeding.

10. Expiration. This approval will expire on July 11, 2020, unless an encroachment permit has been issued or a written request for extension is filed with the Planning Division prior to the expiration date and subsequently approved by the Zoning Administrator. The approval shall be valid for no more than six months from the date of permit issuance, unless work is commenced and diligently pursued prior to the expiration of the permit.

Section 4. Effective Date

This resolution shall take effect immediately upon adoption of this resolution.

The foregoing resolution was passed and adopted the 11th day of July 2019, by the Zoning Administrator of the City of Pittsburg, California.

KRISTIN POLLOT, AICP
ZONING ADMINISTRATOR

STANDARD CONDITIONS OF DEVELOPMENT
(Planning Commission Resolution No. 8931)

All projects approved by the Planning Commission must meet the following standard conditions unless specifically exempted by the Commission or Council.

A. Project Site.

1. The applicant shall comply with all regulations and code requirements of the Building Division, Engineering Division, Contra Costa Fire Protection District, the Police Department and any other agencies requiring review of the project. If required, these agencies shall be supplied copies of the final building and site plans.

2. Developer shall provide written notification to adjacent property owners for any drainage work required to collect or convey storm water runoff, which may or will affect their properties.

3. During construction water trucks or sprinkler systems are to be used in sufficient quantities to prevent dust from leaving the site during any earthmoving and/or construction activities. Nonpotable water shall be used from a source approved by the City Engineer. (Title 15 of PMC)

4. Continuous 6" high Portland Concrete Cement curbing shall be provided between all driveways and landscaped areas as indicated in the City of Pittsburg Standard Details. In addition to above, curbing between length of parking space and landscaped area shall include a 12" wide "Courtesy Curb."

5. CC&R's (Covenants, Conditions and Restrictions) for the project shall contain appropriate provisions for joint maintenance of any infrastructure, roadways, utilities, landscaping and irrigation as determined necessary by the City Engineer.

6. Developer shall submit a study addressing on and off-site storm water and sewer system capabilities. If the study indicates that the present system is inadequate, the developer must provide plans and install any additional storm water and sanitary and sanitary sewer facilities including off-site improvements to correct storm water runoff and sanitary sewer demands anticipated for upstream buildout in accordance with the Pittsburg General Plan.

7. Environmental and engineering studies, as directed by the Planning and Building Director, must be complete and on file prior to commencement to plan checking. Developer shall install off-street improvements determined necessary by the City Engineer to provide safe traffic conditions.

8. Developer shall underground existing and required on and off-site utilities as specified in Chapter 17 of the Municipal Code or as deemed necessary by the City Engineer.

9. All site development shall comply with title 12 (Streets, Sidewalks and Utilities), Title 13 (Water and Sewers) and Chapter 15.88 (Grading, Erosion and Sediment Control) of the Pittsburg Municipal Code as determined by the City Engineer. Issuance of a site development permit will be required whereby specific engineering requirements will be made as conditions of approval of that permit.

10. The CC&R's shall restrict the storage of recreational vehicles on this site or parcels unless they are the principle source of transportation for the

owner and prohibit parking on the public street for long than 72 hours.

11. All retaining wall adjacent to public right-of-ways shall be provided with decorative treatment, subject to approval by the Planning Division.

12. The design of any masonry soundwall shall be approved by the Planning and Building Department. It shall match or harmonize with existing soundwalls of neighboring projects along that street.

B. Architecture.

1. All mechanical, irrigation, ground and/or roof mounted equipment shall be architecturally screened from view from all public right-of-ways prior to issuance of certificate of occupancy.

2. All trash enclosures shall be constructed of masonry material with self-enclosing doors and have a second access. The enclosure shall have materials and colors consistent with the primary building.

3. All vents, gutters, downspouts, flashing electrical conduits, etc., shall be painted or finished to match the color of the adjacent surface unless otherwise directed by the Planning Commission.

4. Soffits and other architectural elements visible from view but not detailed on the plans shall be finished in a material in harmony with the exterior of the building.

5. Finish quality of exterior design elements including, but not limited to, building façades and landscaping shall be subject to approval of the Planning Division prior to issuance of Certificate of Occupancy.

C. Landscaping.

1. Specific landscaping for screening shall have an appearance of mature growth subject to a field check and approval by the Planning Division prior to Certificate of Occupancy.

2. The area under the drip line of all existing trees, which are to be saved, shall be fenced during construction. Grading shall be restricted under them to prevent soil compaction around the trees and to protect them from damage.

3. An existing tree inventory shall be created and included on the site plan for all new projects prior to approval of grading plan.

4. All slope banks in excess of five (5) feet in vertical height and 2:1 or greater slope shall be landscaped and irrigated for erosion control and to soften their appearance as follows: one 15-gallon or larger size tree per each 150 sq. ft. of slope area, one 1-gallon or larger size shrub per each 100 sq. ft. of slope area, and appropriate ground cover 12-24 inches on-center. In addition, slope banks in excess of eight (8) feet in vertical eight and 2:1 or greater slope also include one 5-gallon or larger size tree per each 250 sq. ft. of slope area. Trees and shrubs shall be planted in staggered clusters to soften and vary slope plane. Slope planting required by this condition shall include a permanent irrigation system to be installed by the developer prior to occupancy.

5. All planting shall be maintained in good growing condition. Such maintenance shall include, where appropriate, pruning, mowing, weeding, cleaning of debris and trash, fertilizing and regular watering. Whenever necessary, planting shall be replaced with other plant materials to insure continued compliance with applicable landscaping requirements. Required

irrigation systems shall be fully maintained in sound operating condition with heads periodically cleaned and replaced when missing to insure continued regular watering of landscape areas, and health and vitality of landscape materials.

D. General Requirements

1. Final inspection for occupancy permits will not be granted until all construction and landscaping is complete in accordance with approved plans.

2. The applicant shall defend, indemnify and hold harmless the City of Pittsburg, its agents, officers, and employees from any claim, action, or proceeding against the City or its agents, officers, or employees to attack, set aside, void or annul this approval, or any aspect of the City's consideration of applicant's project. The applicant recognizes and agrees that applicant's voluntary commitment to meet the obligations described in this condition is an integral factor in the City's approval of this project. The intent of this condition is to require the applicant to bear the cost of any and all litigation instituted to overturn or in any way modify the City's approval of this project. Such costs include without limitation, any award of attorney's fees and costs to a prevailing plaintiff or petitioner. In the event the city becomes aware of any such claim, action, or proceeding, the City shall promptly notify the applicant and shall cooperate fully in the defense. If the City fails to promptly notify the applicant, or if the City fails to cooperate fully in the defense, the applicant shall not thereafter be responsible to defend, indemnify, or hold harmless the City. Nothing contained in this condition prohibits the City from participating in the defense of any claim, action, or proceeding, it both the following occur: (a) the City bears its own attorneys' fees and costs; and (b) the City defends the action in good faith. The applicant shall not be required to pay or perform any settlement unless the applicant approves the settlement.

3. It is required by State Law (Business and Professional Code Section No. 5537 & 5538 and Section 302(b) of the Uniform Building Code) that all commercial buildings, new or existing must have a licensed professional designer (Architect, Civil or Structural Engineer) to design all changes of use or occupancy as well as new construction.

4. The applicant shall submit a complete area water pressure availability study for all phases of the Project prior to issuance of any development permits. If the study indicates that the present system is inadequate, the Applicant must provide plans, which will demonstrate any remedial action necessary to abate the deficiency and shall take all necessary actions at the applicant's expense.

5. This use permit may be recalled to the Planning Commission for review at any time due to complaints regarding lack of compliance with conditions of approval, traffic congestion, noise generation, or other adverse operating characteristics. At such time, the Commission may revoke the use permit or add/modify conditions approval.

6. It is the responsibility of the applicant or developer to check with each agency for requirements that may pertain to their project.

7. All signs shall be submitted to the Planning Division for design review per Title 19 of the Pittsburg Municipal Code.

8. All landscape areas shall be maintained in a healthy, thriving and weed free condition.

9. The site shall be maintained in a neat and clean manner free of trash and debris.

10. All outdoor mechanical equipment, satellite dishes, fire main and all rooftop equipment shall be fully visually screened upon installation subject to the approval of the Planning Division. Screening devices shall be shown on construction and/or landscape plans.

11. All exterior light fixtures shall be shown on plans subject to staff review and approval. All lights attached to buildings shall provide a soft "wash" of light against the wall. All building and parking or yard lights shall conform to City Parking Standards 18.78.050 (F) and Performance Standards 18.82.030 (B) and shall compliment the site and building architecture.

12. Prior to occupancy, the developer shall supply the City with an ACAD computer disk file showing plans that reflect the project as it was build (As-Builts) at the discretion of the Planning and Building Director.

E. Standard Conditions of Approval Requiring Minimum Construction Site Management Practices

1. (Projects involving land disturbances of less than five (5) acres) – During construction activities, the project sponsor shall reduce or prevent to the maximum extent practicable the direct or indirect discharge of any pollutant into the storm drain system utilizing best management practices contained in the California Storm Water Best Management Practices Handbook for Construction Activities. Construction activities include, but are not limited to: watering operations; roadwork and paving operations; concrete and painting; structure construction and painting; construction material storage and handling; construction waste/debris storage and disposal; and, construction equipment/vehicle cleaning, maintenance and fueling operations. The project sponsor is also responsible for training all contractors and subcontractors on the best management practices which are identified in the California Storm Water Best Management Practices Handbook for Construction Activities which will be available at the pre-construct meeting of the project.

or

2. (Projects involving land disturbances of five (5) acres or more) – Prior to commencement of any site work that will result in a land disturbance of five acres or more, the project sponsor shall submit to the City a copy of the Notice of Intent (NOI) sent the State Water Resources Control Board and the Stormwater Pollution Prevention Plan (SWPPP) prepared for the project, as required by the State's General Construction Activity Permit.

3. All storm drains, which serve the site, shall be protected from spills and soil runoff (from unpaved parking areas). The applicant may use "Any Source Control" BMP (Best Management Practice) as listed in the California Storm Water Best Management Practice Handbook for storm water run-ff for commercial and industrial sites. Storm drains will be inspected periodically. Questions may be referred to City NPDES Coordinator, at 252-4920.

City of Pittsburg
Community Development Department – Planning Division
65 Civic Avenue, Pittsburg, CA 94565 | Tel: (925) 252-4920 | Fax: (925) 252-4814

Date: July 11, 2019

SUBJECT: ZA RESOLUTION NO. 341

Dear Applicant,

Enclosed is a copy of the resolution adopted by the Zoning Administrator. A copy of our Standard Conditions of Development is also included. Please read the enclosed documents and retain them for your files. All conditions of approval shall be incorporated into subsequent plan submittals and construction documents, where appropriate.

The enclosed resolution is valid for a limited period of time as specified in the resolution. Please make a note of the applicable expiration date and plan your construction timeline accordingly to avoid the loss of your entitlements.

If you have any questions about the enclosed resolution, please contact the Planning Division at the number listed above.

Sincerely,

Kristin Pollot, AICP
Planning Manager

Enclosures: (2) Resolution No. 341
Standard Conditions of Development

BEFORE THE ZONING ADMINISTRATOR OF THE CITY OF PITTSBURG

In the Matter of:

Resolution Approving a Fence Height Exception for an Existing Seven-Foot-Tall Fence, for "Pittsburg Seventh-Day Adventist Church Fence Height Exception, AP-19-1399 (FHE)."	)	Resolution No. 341

The Zoning Administrator DOES RESOLVE as follows:

Section 1. Background

A. On January 9, 2019, Garrett Anderson, filed Fence Height Exception Application No. 19-1399, requesting approval to legalize an existing seven-foot-tall wrought iron fence, located along the property line at 900 Los Medanos Street and 925 Cumberland Street in the RH-D (Downtown High Density Residential) District. Assessor's Parcel Nos. 085-196-003 and 085-196-004.

B. On January 23, 2019, the Zoning Administrator submitted to the Planning Commission a Notice of Intent to exercise delegated authority for the subject application pursuant to Pittsburg Municipal Code (PMC) section 18.84.205(F)(2).

C. The fence height exception request is categorically exempt from the requirements of the California Environmental Quality Act (CEQA) under Class 3, "New Construction or Conversion of Small Structures" of the State CEQA Guidelines, section 15303.

D. On or prior to July 1, 2019, notice of the July 11, 2019 public hearing was posted at City Hall, near the subject site, and on the 'Public Notices' section of the city's website; was delivered for posting at the Pittsburg Library; and was mailed via first class or electronic mail to the applicant, to the property owner, to owners of property located within 300 feet of the project site, and to individuals who had previously filed written request for such notice, in accordance with Pittsburg Municipal Code (PMC) section 18.14.010 and Government Code section 65091.

E. PMC section 18.84.205(F), *Exceptions to Fence Height Regulations,* allows for the maximum allowable fence height to be increased through the issuance of a fence height exception approved by the Zoning Administrator. In order to approve a fence height exception, the Zoning Administrator must make findings (PMC section 18.84.205.F.2) that the proposed fence structures:

1. will not infringe upon the light, air circulation, or visual openness of surrounding properties;

2. will not detract, impair or destroy the characteristics of the established area;

and,

3. will not be detrimental to the health, safety or welfare of persons residing or working in or adjacent to the area or neighborhood of such structure.

F. On July 11, 2019, the Zoning Administrator held a public hearing on Fence Height Exception Application No. 19-1399, at which time oral and/or written testimony was considered.

Section 2. Findings

A. Based on all the information contained in the Planning Division files on this project, incorporated herein by reference and available for review in the Planning Division located at 65 Civic Avenue in Pittsburg, and based on all oral and written testimony presented at the public hearing, the Zoning Administrator finds that:

1. All recitals above are true and correct and are incorporated herein by reference.

2. The existing fence does not infringe upon the light, air circulation, or visual openness of the subject property or surrounding properties, in that the fence structure is comprised of seven-foot tall visually permeable panels with matching vehicle gates. The spacing of the pickets within the fence panels and gates allow light and air to pass through, and provide visual openness between the site and the surrounding streets and properties.

3. The existing fence does not detract, impair or destroy the characteristics of the established area, in that it is constructed in a sound and workmanlike fashion using new materials.

4. The existing fence is not detrimental to the health, safety, or welfare of persons residing or working in or adjacent to the area or neighborhood, in that the height of the fence deters trespassers from entering the property and engaging in illegal activity. The visually open style of the fence structure also deters graffiti, as it cannot easily be applied to open surfaces. In addition, the open design of the fence facilitates natural surveillance thereby promoting the health, safety and welfare of those members of the church on site, as well as persons in the general vicinity.

Section 3. Decision

A. Based on the findings set forth above, the Zoning Administrator hereby approves Fence Height Exception Application No. 19-1399, subject to the following conditions.

1. Site Plan. The existing fence shall remain substantially as presented in the

approved site plan and photos date-stamped January 9, 2019 and July 2, 2019, except as may be modified by the conditions below.

2. Fence Maintenance. The fence shall be maintained erect and in a state of good repair. A dilapidated, dangerous, or unsightly fence shall be repaired, replaced, or removed, as the situation may warrant.

3. Property Maintenance. The entire site including paved, unpaved, and landscaped areas must be kept in a neat and orderly manner, free of weeds loose trash, debris, and other litter.

4. Property Maintenance. The applicant shall ensure that no landscaping or debris encroaches from the property onto the public right-of-way.

5. Landscaping. All site landscaping shall be maintained so as to remain thriving and free of weeds. Any dead plants shall be replaced with the same or similar species.

6. Existing Fencing. The applicant shall remove all existing chain-link fencing and barbed wire from the site.

7. Signage. The applicant shall remove any and all unpermitted signs from the property; or, apply for a Sign Review Permit to legalize existing signage.

Standard Conditions:

8. Construction. All site development shall comply with Title 15 (Building and Construction) of the Pittsburg Municipal Code.

9. Other Agency Requirements. The applicant shall comply with all requirements of the Pittsburg Building and Engineering Divisions, the Contra Costa County Fire Protection District, and all other applicable local, state and federal agencies. It is the responsibility of the business owner to contact each local, state, or federal agency for requirements that may pertain to this project.

10. Standard Conditions. The Standard Conditions of Development as adopted by the Pittsburg Planning Commission by Resolution No. 8931 shall apply as conditions of approval for this project as applicable. Where there is a conflict between this resolution and the Standard Conditions of Development, this Zoning Administrator resolution shall govern.

11. Indemnification. Applicant agrees to indemnify, defend, and hold harmless the City, its officials, officers, employees, agents and consultants from any and all administrative, legal or equitable actions or other proceedings instituted by any person challenging the validity of this project approval, subsequent project approval, or other action arising out of, or in connection with, this project

approval. The parties shall cooperate in defending such action or proceeding. The parties shall use reasonable efforts to select mutually agreeable defense counsel but, if the parties cannot reach agreement, City may select its own legal counsel at applicant's sole cost and expense. Applicant may select its own legal counsel to represent applicant's interests at applicant's sole cost and expense. Applicant shall pay for City's costs of defense, whether directly or by timely reimbursement to City on a monthly basis. Such costs shall include, but not be limited to, all court costs and attorney's fees expended by City in defense of any such action or other proceeding, plus staff and City Attorney time spent responding to and defending the claim, action or proceeding.

12. Expiration. This approval will expire on July 11, 2020, unless an encroachment permit has been issued or a written request for extension is filed with the Planning Division prior to the expiration date and subsequently approved by the Zoning Administrator. The approval shall be valid for no more than six months from the date of permit issuance, unless work is commenced and diligently pursued prior to the expiration of the permit.

Section 4. Effective Date

This resolution shall take effect immediately upon adoption of this resolution.

The foregoing resolution was passed and adopted the 11th day of July, 2019, by the Zoning Administrator of the City of Pittsburg, California.

KRISTIN POLLOT, AICP
ZONING ADMINISTRATOR

STANDARD CONDITIONS OF DEVELOPMENT
(Planning Commission Resolution No. 8931)

All projects approved by the Planning Commission must meet the following standard conditions unless specifically exempted by the Commission or Council.

A. Project Site.

1. The applicant shall comply with all regulations and code requirements of the Building Division, Engineering Division, Contra Costa Fire Protection District, the Police Department and any other agencies requiring review of the project. If required, these agencies shall be supplied copies of the final building and site plans.

2. Developer shall provide written notification to adjacent property owners for any drainage work required to collect or convey storm water runoff, which may or will affect their properties.

3. During construction water trucks or sprinkler systems are to be used in sufficient quantities to prevent dust from leaving the site during any earthmoving and/or construction activities. Nonpotable water shall be used from a source approved by the City Engineer. (Title 15 of PMC)

4. Continuous 6" high Portland Concrete Cement curbing shall be provided between all driveways and landscaped areas as indicated in the City of Pittsburg Standard Details. In addition to above, curbing between length of parking space and landscaped area shall include a 12" wide "Courtesy Curb."

5. CC&R's (Covenants, Conditions and Restrictions) for the project shall contain appropriate provisions for joint maintenance of any infrastructure, roadways, utilities, landscaping and irrigation as determined necessary by the City Engineer.

6. Developer shall submit a study addressing on and off-site storm water and sewer system capabilities. If the study indicates that the present system is inadequate, the developer must provide plans and install any additional storm water and sanitary and sanitary sewer facilities including off-site improvements to correct storm water runoff and sanitary sewer demands anticipated for upstream buildout in accordance with the Pittsburg General Plan.

7. Environmental and engineering studies, as directed by the Planning and Building Director, must be complete and on file prior to commencement to plan checking. Developer shall install off-street improvements determined necessary by the City Engineer to provide safe traffic conditions.

8. Developer shall underground existing and required on and off-site utilities as specified in Chapter 17 of the Municipal Code or as deemed necessary by the City Engineer.

9. All site development shall comply with title 12 (Streets, Sidewalks and Utilities), Title 13 (Water and Sewers) and Chapter 15.88 (Grading, Erosion and Sediment Control) of the Pittsburg Municipal Code as determined by the City Engineer. Issuance of a site development permit will be required whereby specific engineering requirements will be made as conditions of approval of that permit.

10. The CC&R's shall restrict the storage of recreational vehicles on this site or parcels unless they are the principle source of transportation for the

owner and prohibit parking on the public street for long than 72 hours.

11. All retaining wall adjacent to public right-of-ways shall be provided with decorative treatment, subject to approval by the Planning Division.

12. The design of any masonry soundwall shall be approved by the Planning and Building Department. It shall match or harmonize with existing soundwalls of neighboring projects along that street.

B. Architecture.

1. All mechanical, irrigation, ground and/or roof mounted equipment shall be architecturally screened from view from all public right-of-ways prior to issuance of certificate of occupancy.

2. All trash enclosures shall be constructed of masonry material with self-enclosing doors and have a second access. The enclosure shall have materials and colors consistent with the primary building.

3. All vents, gutters, downspouts, flashing electrical conduits, etc., shall be painted or finished to match the color of the adjacent surface unless otherwise directed by the Planning Commission.

4. Soffits and other architectural elements visible from view but not detailed on the plans shall be finished in a material in harmony with the exterior of the building.

5. Finish quality of exterior design elements including, but not limited to, building façades and landscaping shall be subject to approval of the Planning Division prior to issuance of Certificate of Occupancy.

C. Landscaping.

1. Specific landscaping for screening shall have an appearance of mature growth subject to a field check and approval by the Planning Division prior to Certificate of Occupancy.

2. The area under the drip line of all existing trees, which are to be saved, shall be fenced during construction. Grading shall be restricted under them to prevent soil compaction around the trees and to protect them from damage.

3. An existing tree inventory shall be created and included on the site plan for all new projects prior to approval of grading plan.

4. All slope banks in excess of five (5) feet in vertical height and 2:1 or greater slope shall be landscaped and irrigated for erosion control and to soften their appearance as follows: one 15-gallon or larger size tree per each 150 sq. ft. of slope area, one 1-gallon or larger size shrub per each 100 sq. ft. of slope area, and appropriate ground cover 12-24 inches on-center. In addition, slope banks in excess of eight (8) feet in vertical eight and 2:1 or greater slope also include one 5-gallon or larger size tree per each 250 sq. ft. of slope area. Trees and shrubs shall be planted in staggered clusters to soften and vary slope plane. Slope planting required by this condition shall include a permanent irrigation system to be installed by the developer prior to occupancy.

5. All planting shall be maintained in good growing condition. Such maintenance shall include, where appropriate, pruning, mowing, weeding, cleaning of debris and trash, fertilizing and regular watering. Whenever necessary, planting shall be replaced with other plant materials to insure continued compliance with applicable landscaping requirements. Required

irrigation systems shall be fully maintained in sound operating condition with heads periodically cleaned and replaced when missing to insure continued regular watering of landscape areas, and health and vitality of landscape materials.

D. General Requirements

1. Final inspection for occupancy permits will not be granted until all construction and landscaping is complete in accordance with approved plans.

2. The applicant shall defend, indemnify and hold harmless the City of Pittsburg, its agents, officers, and employees from any claim, action, or proceeding against the City or its agents, officers, or employees to attack, set aside, void or annul this approval, or any aspect of the City's consideration of applicant's project. The applicant recognizes and agrees that applicant's voluntary commitment to meet the obligations described in this condition is an integral factor in the City's approval of this project. The intent of this condition is to require the applicant to bear the cost of any and all litigation instituted to overturn or in any way modify the City's approval of this project. Such costs include without limitation, any award of attorney's fees and costs to a prevailing plaintiff or petitioner. In the event the city becomes aware of any such claim, action, or proceeding, the City shall promptly notify the applicant and shall cooperate fully in the defense. If the City fails to promptly notify the applicant, or if the City fails to cooperate fully in the defense, the applicant shall not thereafter be responsible to defend, indemnify, or hold harmless the City. Nothing contained in this condition prohibits the City from participating in the defense of any claim, action, or proceeding, it both the following occur: (a) the City bears its own attorneys' fees and costs; and (b) the City defends the action in good faith. The applicant shall not be required to pay or perform any settlement unless the applicant approves the settlement.

3. It is required by State Law (Business and Professional Code Section No. 5537 & 5538 and Section 302(b) of the Uniform Building Code) that all commercial buildings, new or existing must have a licensed professional designer (Architect, Civil or Structural Engineer) to design all changes of use or occupancy as well as new construction.

4. The applicant shall submit a complete area water pressure availability study for all phases of the Project prior to issuance of any development permits. If the study indicates that the present system is inadequate, the Applicant must provide plans, which will demonstrate any remedial action necessary to abate the deficiency and shall take all necessary actions at the applicant's expense.

5. This use permit may be recalled to the Planning Commission for review at any time due to complaints regarding lack of compliance with conditions of approval, traffic congestion, noise generation, or other adverse operating characteristics. At such time, the Commission may revoke the use permit or add/modify conditions approval.

6. It is the responsibility of the applicant or developer to check with each agency for requirements that may pertain to their project.

7. All signs shall be submitted to the Planning Division for design review per Title 19 of the Pittsburg Municipal Code.

8. All landscape areas shall be maintained in a healthy, thriving and weed free condition.

9. The site shall be maintained in a neat and clean manner free of trash and debris.

10. All outdoor mechanical equipment, satellite dishes, fire main and all rooftop equipment shall be fully visually screened upon installation subject to the approval of the Planning Division. Screening devices shall be shown on construction and/or landscape plans.

11. All exterior light fixtures shall be shown on plans subject to staff review and approval. All lights attached to buildings shall provide a soft "wash" of light against the wall. All building and parking or yard lights shall conform to City Parking Standards 18.78.050 (F) and Performance Standards 18.82.030 (B) and shall compliment the site and building architecture.

12. Prior to occupancy, the developer shall supply the City with an ACAD computer disk file showing plans that reflect the project as it was build (As-Builts) at the discretion of the Planning and Building Director.

E. Standard Conditions of Approval Requiring Minimum Construction Site Management Practices

1. (Projects involving land disturbances of less than five (5) acres) – During construction activities, the project sponsor shall reduce or prevent to the maximum extent practicable the direct or indirect discharge of any pollutant into the storm drain system utilizing best management practices contained in the California Storm Water Best Management Practices Handbook for Construction Activities. Construction activities include, but are not limited to: watering operations; roadwork and paving operations; concrete and painting; structure construction and painting; construction material storage and handling; construction waste/debris storage and disposal; and, construction equipment/vehicle cleaning, maintenance and fueling operations. The project sponsor is also responsible for training all contractors and subcontractors on the best management practices which are identified in the California Storm Water Best Management Practices Handbook for Construction Activities which will be available at the pre-construct meeting of the project.

or

2. (Projects involving land disturbances of five (5) acres or more) – Prior to commencement of any site work that will result in a land disturbance of five acres or more, the project sponsor shall submit to the City a copy of the Notice of Intent (NOI) sent the State Water Resources Control Board and the Stormwater Pollution Prevention Plan (SWPPP) prepared for the project, as required by the State's General Construction Activity Permit.

3. All storm drains, which serve the site, shall be protected from spills and soil runoff (from unpaved parking areas). The applicant may use "Any Source Control" BMP (Best Management Practice) as listed in the California Storm Water Best Management Practice Handbook for storm water run-ff for commercial and industrial sites. Storm drains will be inspected periodically. Questions may be referred to City NPDES Coordinator, at 252-4920.

City of Pittsburg
Community Development Department – Planning Division
65 Civic Avenue, Pittsburg, CA 94565 | Tel: (925) 252-4920 | Fax: (925) 252-4814

Date: July 11, 2019

SUBJECT: ZA RESOLUTION NO. 342

Dear Applicant,

Enclosed is a copy of the resolution adopted by the Zoning Administrator. A copy of our Standard Conditions of Development is also included. Please read the enclosed documents and retain them for your files. All conditions of approval shall be incorporated into subsequent plan submittals and construction documents, where appropriate.

The enclosed resolution is valid for a limited period of time as specified in the resolution. Please make a note of the applicable expiration date and plan your construction timeline accordingly to avoid the loss of your entitlements.

If you have any questions about the enclosed resolution, please contact the Planning Division at the number listed above.

Sincerely,

Kristin Pollot, AICP
Planning Manager

Enclosures: (2) Resolution No. 342
Standard Conditions of Development

BEFORE THE ZONING ADMINISTRATOR OF THE CITY OF PITTSBURG

In the Matter of:

Resolution Approving a Fence Height Exception for an Existing Six-Foot-Tall Fence with Barbed Wire, for "Savage Services Fence Height Exception, AP-17-1244 (FHE)."	)))))	Resolution No. 342

The Zoning Administrator DOES RESOLVE as follows:

Section 1. Background

A. On May 9, 2017, Jon D. Simmons, on behalf of Savage Services, filed Fence Height Exception Application No. 17-1244, requesting approval to legalize an existing six-foot-tall chain-link fence with barbed wire located within the required front yard setback at 1501 Loveridge Road in the IG (General Industrial) District. Assessor's Parcel No. 073-230-033.

B. On July 25, 2017, the Zoning Administrator submitted to the Planning Commission a Notice of Intent to exercise delegated authority for the subject application pursuant to Pittsburg Municipal Code (PMC) section 18.84.205(F)(2).

C. The fence height exception request is categorically exempt from the requirements of the California Environmental Quality Act (CEQA) under Class 3, "New Construction or Conversion of Small Structures" of the State CEQA Guidelines, section 15303.

D. On or prior to July 1, 2019, notice of the July 11, 2019 public hearing was posted at City Hall, near the subject site, and on the 'Public Notices' section of the city's website; was delivered for posting at the Pittsburg Library; and was mailed via first class or electronic mail to the applicant, to the property owner, to owners of property located within 300 feet of the project site, and to individuals who had previously filed written request for such notice, in accordance with Pittsburg Municipal Code (PMC) section 18.14.010 and Government Code section 65091.

E. PMC section 18.84.205(F), *Exceptions to Fence Height Regulations,* allows for the maximum allowable fence height to be increased through the issuance of a fence height exception approved by the Zoning Administrator. In order to approve a fence height exception, the Zoning Administrator must make findings (PMC section 18.84.205.F.2) that the proposed fence structures:

1. will not infringe upon the light, air circulation, or visual openness of surrounding properties;

2. will not detract, impair or destroy the characteristics of the established area;

and,

3. will not be detrimental to the health, safety or welfare of persons residing or working in or adjacent to the area or neighborhood of such structure.

F. On July 11, 2019, the Zoning Administrator held a public hearing on Fence Height Exception Application No. 17-1244, at which time oral and/or written testimony was considered.

Section 2. Findings

A. Based on all the information contained in the Planning Division files on this project, incorporated herein by reference and available for review in the Planning Division located at 65 Civic Avenue in Pittsburg, and based on all oral and written testimony presented at the public hearing, the Zoning Administrator finds that:

1. All recitals above are true and correct and are incorporated herein by reference.

2. The existing fence does not infringe upon the light, air circulation, or visual openness of the subject property or surrounding properties, in that the chain-link material allows light and air to pass through and provides visual openness between the site and the street.

3. The existing fence does not detract, impair or destroy the characteristics of the established area, in that it is constructed in a sound and workmanlike fashion using good materials, and is consistent with other fences in the vicinity.

4. The existing fence is not detrimental to the health, safety, or welfare of persons residing or working in or adjacent to the area or neighborhood, in that the height and placement of the fence deters trespassers from entering the property, the visually open style of the fence deters graffiti, and the transparency of the fence provides natural surveillance of the property thereby promoting the health, safety and welfare of pedestrians in the general vicinity.

Section 3. Decision

A. Based on the findings set forth above, the Zoning Administrator hereby approves Fence Height Exception Application No. 17-1244, subject to the following conditions.

1. Site Plan. The existing fence shall remain substantially as presented in the approved site plan date-stamped May 9, 2017, except as may be modified by the conditions below.

2. Razor Wire. Razor wire shall be located on top of the chain-link fencing, at a

minimum of six-feet above the adjacent grade, but in no event shall the total fence height (including razor wire) exceed twelve-feet.

3. Fence Maintenance. The fence shall be maintained erect and in a state of good repair. A dilapidated, dangerous, or unsightly fence or wall must be repaired, replaced, or removed, as the situation may warrant.

4. Property Maintenance. The entire site including paved, unpaved, and landscaped areas must be kept in a neat and orderly manner, free of weeds loose trash, debris, and other litter.

5. Property Maintenance. The property owner shall ensure that rubbish or other unsightly material that accumulates on either side of the fence and gates is removed within 72 hours of its accumulation, and that the fence and gates are maintained in a neat, clean, and orderly fashion and in good repair at all times.

6. Landscaping. All site landscaping shall be maintained so as to remain thriving and free of weeds. Any dead plants shall be replaced with the same or similar species.

Standard Conditions:

7. Construction. All site development shall comply with Title 15 (Building and Construction) of the Pittsburg Municipal Code.

8. Other Agency Requirements. The applicant shall comply with all requirements of the Pittsburg Building and Engineering Divisions, the Contra Costa County Fire Protection District, and all other applicable local, state and federal agencies. It is the responsibility of the business owner to contact each local, state, or federal agency for requirements that may pertain to this project.

9. Standard Conditions. The Standard Conditions of Development as adopted by the Pittsburg Planning Commission by Resolution No. 8931 shall apply as conditions of approval for this project as applicable. Where there is a conflict between this resolution and the Standard Conditions of Development, this Zoning Administrator resolution shall govern.

10. Indemnification. Applicant agrees to indemnify, defend, and hold harmless the City, its officials, officers, employees, agents and consultants from any and all administrative, legal or equitable actions or other proceedings instituted by any person challenging the validity of this project approval, subsequent project approval, or other action arising out of, or in connection with, this project approval. The parties shall cooperate in defending such action or proceeding. The parties shall use reasonable efforts to select mutually agreeable defense counsel but, if the parties cannot reach agreement, City may select its own legal counsel at applicant's sole cost and expense. Applicant may select its own legal

counsel to represent applicant's interests at applicant's sole cost and expense. Applicant shall pay for City's costs of defense, whether directly or by timely reimbursement to City on a monthly basis. Such costs shall include, but not be limited to, all court costs and attorney's fees expended by City in defense of any such action or other proceeding, plus staff and City Attorney time spent responding to and defending the claim, action or proceeding.

11. Expiration. This approval will expire on July 11, 2020, unless an encroachment permit has been issued or a written request for extension is filed with the Planning Division prior to the expiration date and subsequently approved by the Zoning Administrator. The approval shall be valid for no more than six months from the date of permit issuance, unless work is commenced and diligently pursued prior to the expiration of the permit.

Section 4. Effective Date

This resolution shall take effect immediately upon adoption of this resolution.

The foregoing resolution was passed and adopted the 11th day of July, 2019, by the Zoning Administrator of the City of Pittsburg, California.

KRISTIN POLLOT, AICP
ZONING ADMINISTRATOR

STANDARD CONDITIONS OF DEVELOPMENT
(Planning Commission Resolution No. 8931)

All projects approved by the Planning Commission must meet the following standard conditions unless specifically exempted by the Commission or Council.

A. Project Site.

1. The applicant shall comply with all regulations and code requirements of the Building Division, Engineering Division, Contra Costa Fire Protection District, the Police Department and any other agencies requiring review of the project. If required, these agencies shall be supplied copies of the final building and site plans.

2. Developer shall provide written notification to adjacent property owners for any drainage work required to collect or convey storm water runoff, which may or will affect their properties.

3. During construction water trucks or sprinkler systems are to be used in sufficient quantities to prevent dust from leaving the site during any earthmoving and/or construction activities. Nonpotable water shall be used from a source approved by the City Engineer. (Title 15 of PMC)

4. Continuous 6" high Portland Concrete Cement curbing shall be provided between all driveways and landscaped areas as indicated in the City of Pittsburg Standard Details. In addition to above, curbing between length of parking space and landscaped area shall include a 12" wide "Courtesy Curb."

5. CC&R's (Covenants, Conditions and Restrictions) for the project shall contain appropriate provisions for joint maintenance of any infrastructure, roadways, utilities, landscaping and irrigation as determined necessary by the City Engineer.

6. Developer shall submit a study addressing on and off-site storm water and sewer system capabilities. If the study indicates that the present system is inadequate, the developer must provide plans and install any additional storm water and sanitary and sanitary sewer facilities including off-site improvements to correct storm water runoff and sanitary sewer demands anticipated for upstream buildout in accordance with the Pittsburg General Plan.

7. Environmental and engineering studies, as directed by the Planning and Building Director, must be complete and on file prior to commencement to plan checking. Developer shall install off-street improvements determined necessary by the City Engineer to provide safe traffic conditions.

8. Developer shall underground existing and required on and off-site utilities as specified in Chapter 17 of the Municipal Code or as deemed necessary by the City Engineer.

9. All site development shall comply with title 12 (Streets, Sidewalks and Utilities), Title 13 (Water and Sewers) and Chapter 15.88 (Grading, Erosion and Sediment Control) of the Pittsburg Municipal Code as determined by the City Engineer. Issuance of a site development permit will be required whereby specific engineering requirements will be made as conditions of approval of that permit.

10. The CC&R's shall restrict the storage of recreational vehicles on this site or parcels unless they are the principle source of transportation for the

owner and prohibit parking on the public street for long than 72 hours.

11. All retaining wall adjacent to public right-of-ways shall be provided with decorative treatment, subject to approval by the Planning Division.

12. The design of any masonry soundwall shall be approved by the Planning and Building Department. It shall match or harmonize with existing soundwalls of neighboring projects along that street.

B. Architecture.

1. All mechanical, irrigation, ground and/or roof mounted equipment shall be architecturally screened from view from all public right-of-ways prior to issuance of certificate of occupancy.

2. All trash enclosures shall be constructed of masonry material with self-enclosing doors and have a second access. The enclosure shall have materials and colors consistent with the primary building.

3. All vents, gutters, downspouts, flashing electrical conduits, etc., shall be painted or finished to match the color of the adjacent surface unless otherwise directed by the Planning Commission.

4. Soffits and other architectural elements visible from view but not detailed on the plans shall be finished in a material in harmony with the exterior of the building.

5. Finish quality of exterior design elements including, but not limited to, building façades and landscaping shall be subject to approval of the Planning Division prior to issuance of Certificate of Occupancy.

C. Landscaping.

1. Specific landscaping for screening shall have an appearance of mature growth subject to a field check and approval by the Planning Division prior to Certificate of Occupancy.

2. The area under the drip line of all existing trees, which are to be saved, shall be fenced during construction. Grading shall be restricted under them to prevent soil compaction around the trees and to protect them from damage.

3. An existing tree inventory shall be created and included on the site plan for all new projects prior to approval of grading plan.

4. All slope banks in excess of five (5) feet in vertical height and 2:1 or greater slope shall be landscaped and irrigated for erosion control and to soften their appearance as follows: one 15-gallon or larger size tree per each 150 sq. ft. of slope area, one 1-gallon or larger size shrub per each 100 sq. ft. of slope area, and appropriate ground cover 12-24 inches on-center. In addition, slope banks in excess of eight (8) feet in vertical eight and 2:1 or greater slope also include one 5-gallon or larger size tree per each 250 sq. ft. of slope area. Trees and shrubs shall be planted in staggered clusters to soften and vary slope plane. Slope planting required by this condition shall include a permanent irrigation system to be installed by the developer prior to occupancy.

5. All planting shall be maintained in good growing condition. Such maintenance shall include, where appropriate, pruning, mowing, weeding, cleaning of debris and trash, fertilizing and regular watering. Whenever necessary, planting shall be replaced with other plant materials to insure continued compliance with applicable landscaping requirements. Required

irrigation systems shall be fully maintained in sound operating condition with heads periodically cleaned and replaced when missing to insure continued regular watering of landscape areas, and health and vitality of landscape materials.

D. General Requirements

1. Final inspection for occupancy permits will not be granted until all construction and landscaping is complete in accordance with approved plans.

2. The applicant shall defend, indemnify and hold harmless the City of Pittsburg, its agents, officers, and employees from any claim, action, or proceeding against the City or its agents, officers, or employees to attack, set aside, void or annul this approval, or any aspect of the City's consideration of applicant's project. The applicant recognizes and agrees that applicant's voluntary commitment to meet the obligations described in this condition is an integral factor in the City's approval of this project. The intent of this condition is to require the applicant to bear the cost of any and all litigation instituted to overturn or in any way modify the City's approval of this project. Such costs include without limitation, any award of attorney's fees and costs to a prevailing plaintiff or petitioner. In the event the city becomes aware of any such claim, action, or proceeding, the City shall promptly notify the applicant and shall cooperate fully in the defense. If the City fails to promptly notify the applicant, or if the City fails to cooperate fully in the defense, the applicant shall not thereafter be responsible to defend, indemnify, or hold harmless the City. Nothing contained in this condition prohibits the City from participating in the defense of any claim, action, or proceeding, it both the following occur: (a) the City bears its own attorneys' fees and costs; and (b) the City defends the action in good faith. The applicant shall not be required to pay or perform any settlement unless the applicant approves the settlement.

3. It is required by State Law (Business and Professional Code Section No. 5537 & 5538 and Section 302(b) of the Uniform Building Code) that all commercial buildings, new or existing must have a licensed professional designer (Architect, Civil or Structural Engineer) to design all changes of use or occupancy as well as new construction.

4. The applicant shall submit a complete area water pressure availability study for all phases of the Project prior to issuance of any development permits. If the study indicates that the present system is inadequate, the Applicant must provide plans, which will demonstrate any remedial action necessary to abate the deficiency and shall take all necessary actions at the applicant's expense.

5. This use permit may be recalled to the Planning Commission for review at any time due to complaints regarding lack of compliance with conditions of approval, traffic congestion, noise generation, or other adverse operating characteristics. At such time, the Commission may revoke the use permit or add/modify conditions approval.

6. It is the responsibility of the applicant or developer to check with each agency for requirements that may pertain to their project.

7. All signs shall be submitted to the Planning Division for design review per Title 19 of the Pittsburg Municipal Code.

8. All landscape areas shall be maintained in a healthy, thriving and weed free condition.

9. The site shall be maintained in a neat and clean manner free of trash and debris.

10. All outdoor mechanical equipment, satellite dishes, fire main and all rooftop equipment shall be fully visually screened upon installation subject to the approval of the Planning Division. Screening devices shall be shown on construction and/or landscape plans.

11. All exterior light fixtures shall be shown on plans subject to staff review and approval. All lights attached to buildings shall provide a soft "wash" of light against the wall. All building and parking or yard lights shall conform to City Parking Standards 18.78.050 (F) and Performance Standards 18.82.030 (B) and shall compliment the site and building architecture.

12. Prior to occupancy, the developer shall supply the City with an ACAD computer disk file showing plans that reflect the project as it was build (As-Builts) at the discretion of the Planning and Building Director.

E. Standard Conditions of Approval Requiring Minimum Construction Site Management Practices

1. (Projects involving land disturbances of less than five (5) acres) – During construction activities, the project sponsor shall reduce or prevent to the maximum extent practicable the direct or indirect discharge of any pollutant into the storm drain system utilizing best management practices contained in the California Storm Water Best Management Practices Handbook for Construction Activities. Construction activities include, but are not limited to: watering operations; roadwork and paving operations; concrete and painting; structure construction and painting; construction material storage and handling; construction waste/debris storage and disposal; and, construction equipment/vehicle cleaning, maintenance and fueling operations. The project sponsor is also responsible for training all contractors and subcontractors on the best management practices which are identified in the California Storm Water Best Management Practices Handbook for Construction Activities which will be available at the pre-construct meeting of the project.

or

2. (Projects involving land disturbances of five (5) acres or more) – Prior to commencement of any site work that will result in a land disturbance of five acres or more, the project sponsor shall submit to the City a copy of the Notice of Intent (NOI) sent the State Water Resources Control Board and the Stormwater Pollution Prevention Plan (SWPPP) prepared for the project, as required by the State's General Construction Activity Permit.

3. All storm drains, which serve the site, shall be protected from spills and soil runoff (from unpaved parking areas). The applicant may use "Any Source Control" BMP (Best Management Practice) as listed in the California Storm Water Best Management Practice Handbook for storm water run-ff for commercial and industrial sites. Storm drains will be inspected periodically. Questions may be referred to City NPDES Coordinator, at 252-4920.

TENTATIVE Pipeline List for Planning Commission

	Pipeline Type	Application Year	App No.	Pipeline Image	Project Name	Applicant/Developer	Street Number	Street Name	APN	Units Proposed OR Building SF	Site Size (AC or SF)	Status	Upcoming PC Date	Upcoming CC Date	Planner Assigned
1	Commercial / Institutional	AP-19	1415		5 Industry Design Review (Best Care Fumigation)	Shaum Mehra	5	Industry	073042012	480 sf	8555	Pending	07/23/19	--	Celina Palmer
2	Commercial / Institutional	AP-18	1319		Avila Storage Yard	Dave Rege	--	Avila	097-140-014	390 storage units	5.0 ac.	Incomplete	TBD	--	Kristin Pollot
3	Commercial / Institutional	AP-19	1426		Grace Bible Fellowship Church Sign Exception	Grace Bible Fellowship/Pastor Steven Vaughan	2200	Crestview	087-205-026	12000	56000	Pending	08/13/19	--	Celina Palmer
4	Commercial / Institutional	AP-16	1189		LMK PETRO Mini-Mart, Gas Station and Car Wash	LMK PETRO	1625	Buchanan	088-030-021	5,372 s.f.	5.0 ac.	Incomplete	TBD	TBD	Celina Palmer
5	Commercial / Institutional	AP-17	1235		Pittsburg Disposal Relocation/Mt. Diablo Resource Recovery Services	Robert Hammons	555	California	073-270-089	20,008 s.f.	1.42 ac.	Pending	08/13/19	--	Celina Palmer
6	Commercial / Institutional	AP-19	1438		Project Run	Erik Alston	961	Garcia	088-540-013	3,340 SF	20,000 SF	Incomplete	TBD	--	John Dacey
7	Commercial / Institutional	AP-18	1349		San Marco Commercial Center	Sierra Pacific Properties	2011	W Leland	097-550-054	35,406 SF	8.34	Pending	TBD	TBD	Hector Rojas
8	Commercial / Institutional	AP-15-	1096	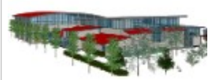	Solomon Temple Baptist Church Addition	Wendell Seifert	655	California	073-140-008	32,000 s.f.	87,120 s.f.	Incomplete	TBD	--	Kristin Pollot
9	Industrial	AP-19	1421		680 Garcia Warehouse	Albert Marcu	680	Garcia	088-590-001, 002, 003, 004, 005, 006	Existing 8468 Proposed (2) 320 SF containers	.66 AC	Pending	08/27/19		Celina Palmer
10	Industrial	2019	1435		Element 7 Commercial Cannabis Permit	Element 7	1416	Bobo				Incomplete	--	TBD	Jordan Davis
11	Industrial	AP-18	1390		Golden State Utility	Golden State Utility	1500	Loveridge	073-230-033			Pending	08/13/19	--	John Dacey
12	Industrial	AP-18	1353		Los Medanos Industrial Park	Discovery Builders, Inc.		Garcia	088-053-004; 088-053-050; 088-053-060; 088-053-070; 088-053-090; 088-053-140	109,900.00	7.5 ac.	Pending	08/13/19	--	Kristin Pollot
13	Industrial	AP-18	1377		McCampbell Analytical Commercial Cannabis	Theresa Johnson	1534	Willow Pass	096-092-009			Incomplete	--	TBD	Jordan Davis
14	Industrial	AP-18	1350		Number One Concrete	Jose Gonzalez	1101	Loveridge	073230031			Incomplete	TBD	--	John Dacey
15	Industrial	AP-19	1412		SFBA Carbon Capture and Mineralization Project	San Francisco Bay Aggregates, LLC	895	East 3rd	073-020-019			Pending	09/10/19	--	Hector Rojas
16	Industrial	AP-18	1371		Stoneman Lab - Commercial Cannabis	Pat O'Keefe	557	Clark	088-250-050			Incomplete	--	TBD	Jordan Davis
17	Multi-Family Residential	AP-19	1424		Edgewater Apartments Expansion Project	Sierra Pacific Properties		Carion	073-190-033	12		Pending	TBD	TBD	Hector Rojas
18	Multi-Family Residential	AP-19	1427		Green Builders, LLC	Mark H Snow Associates	6-14-45	Alturas	087-114-012; 087-114-011; 087-114-014	9 total units (3 triplexes)		Incomplete	TBD	--	Celina Palmer
19	Multi-Family Residential	AP-19	1444		The Atchison	Integrated Community Development	2575	Railroad	088-184-006	212 units	3.94 AC	Pending	TBD	--	Hector Rojas
20	Other Projects	AP-18	1385		Envision Pittsburg	City of Pittsburg			Not applicable (citywide)			Pending	TBD	TBD	Hector Rojas
21	Other Projects	AP-10-	717		Faria/Southwest Hills Annexation & Master Plan	Discovery Builders, Inc.	--	SW Hills Planning Area	097-180-006; 097-200-002; 097-200-003	Potential 1500 units (max)	607 ac.	Pending	TBD	TBD	Kristin Pollot
22	Other Projects	AP-19	1414		McCampbell Analytical Title 5 Cannabis Amendments	McCampbell Analytical - Theresa Johnson			City-wide			Pending	--	TBD	Jordan Davis
23	Other Projects	AP-17	1280		Pittsburg Moves - Active Transportation and Safe Routes Plan	City of Pittsburg	--	citywide	city-wide	n/a	citywide	Pending	--	--	Hector Rojas
24	Single Family Residential	AP-19	1425		70 and 78 Alturas Avenue	Discovery Builders, Inc.	70, 78	Alturas	087-114-004; 087-114-003	6		Incomplete	TBD	--	John Dacey
25	Single Family Residential	AP-16	1170		Bancroft Gardens II	Leticia Martinez/ Discovery Builders	-	Birchwood	095-460-001	28 Homes ranging from 2,046 SF-3,006 SF	5.79 AC	Pending	TBD	TBD	Hector Rojas

PITTSBURG HISTORIC RESOURCES COMMISSION
MEETING MINUTES

March 26, 2019

CALL TO ORDER

A meeting of the Pittsburg Historic Resources Commission was called to order by Chair Robinson at 7:32 p.m. on Tuesday, March 26, 2019, following the Planning Commission meeting in the Council Chamber, City Hall, 65 Civic Avenue, Pittsburg, California.

ROLL CALL

Present: Chair Robinson, Vice-Chair Foster, Commissioners Fields, Moreno, Nguyen, Caliguire, Coniglio

Staff: Community Development Director Jill Hecht, City Engineer Richard Abono, Planning Manager/ Secretary Kristin Pollot, Deputy City Clerk Amanda McVey, Assistant Planner Celina Palmer

REORGANIZATION

On motion by Commissioner Coniglio seconded by Commissioner Nguyen to nominate Elissa Robinson as Chair and carried unanimously.

On motion by Commissioner Coniglio seconded by Commissioner Moreno to nominate Sarah Foster as Vice-Chair and carried unanimously.

DELETIONS / WITHDRAWALS / CONTINUANCES

There were no deletions, withdrawals or continuances.

COMMENTS FROM THE AUDIENCE

There were no comments from the audience.

PRESENTATIONS

There were no presentations

CONSENT

1. Minutes of December 18, 2018

On motion by Commissioner Coniglio seconded by Commissioner Fields to approve the Consent Calendar and carried unanimously.

ADJOURNMENT

The meeting was adjourned at 7:36 p.m.

Respectfully Submitted,

_____

Kristin Pollot, AICP, Secretary

PLANNING DIVISION
Memorandum

MEMO: July 23, 2019
TO: Historic Resource Commission
FROM: Hector J. Rojas, AICP, Senior Planner

RE: **Information Item Regarding 352, 368, and 384 Railroad Avenue**

In 2016, the Oakland Digital Arts & Literacy Center launched an online platform called "Bridgegood". The platform is designed to boost young creative careers by connecting them with small businesses in search of graphic and other professional design services. Bridgegood currently operates a studio in Oakland and was looking to expand into the Pittsburg area.

The Successor Agency for the Redevelopment Agency of the City of Pittsburg and Bridgegood entered into a Purchase and Sale Agreement (PSA) for 352, 368, and 384 Railroad Avenue. These properties are in the New York Landing Historical District and they contain a contributing structure built in 1914. The properties are referred to as the former Royce Building and the former Demetrakopulus Building in the Pittsburg General Plan.

Pursuant to the PSA, Bridgegood may demolish most of the building, but was required to save and incorporate the historic façade facing Railroad Avenue into the new commercial structure. In consultation with its structural engineer, Bridgegood determined it would be more cost effective to replace the entire structure (including the façade) with a whole new building. Planning staff advised Bridgegood that doing so would trigger an Environmental Impact Report (EIR) to determine the historical resource related impacts of a complete demolition. Since there would be a considerable cost associated with an EIR, Bridgegood decided to withdraw from the PSA to explore other current lease opportunities in Old Town.

According to the Successor Agency, there are several other parties that have expressed interest in purchasing 352, 368, and 384 Railroad Avenue. As these parties make progress in their due diligence stage, Planning staff will continue to ensure everyone is aware of the historic nature of the properties and will continue to advocate for adaptive rehabilitation of the historic façade unless directed otherwise by the City Council.

Attachments:
1. Site Photos

Attachment 1 – Site Photos

Historic Façade (Image from 1918)

Current Façade (Image from 2019)